Si33-102.book Page i Tuesday, June 26, 2001 3:18 PM

VRV™ System
R-22 PLUS Series

Part 1 General Information 1

1. Product Outline 2
   - 1.1 Year 2001 Models Using R-22 Refrigerant..... 2
   - 1.2 Outline of New Series Products. 3
   - 1.3 Model Configuration and Combination 5
2. Points to Bear in Mind at the System Design.....6
   - 2.1 Points Relating to the Performance of the Air Conditioning Units 6
   - 2.2 The Installation is of Vital Importance. 7
   - 2.3 Striking a Balance between System Installation and General Construction Work (Comprehensive Flow Chart) 8
   - 2.4 Points to Bear in Mind when Preparing the Contract Drawings..... 9
3. Installation. 12
   - 3.1 Step by Step Installation Procedure 12
   - 3.2 Work Involved in Individual Operations and Points to be Borne in Mind 13
4. Test Operation 60
   - 4.1 Procedure and Outline..... 60
   - 4.2 Operation when Power is Turned On 62
   - 4.3 Outdoor Unit PC Board Ass'y. 63
   - 4.4 Setting Modes..... 65
   - 4.5 Cool/Heat Mode Selection. 72
   - 4.6 Low Noise Operation. 77
   - 4.7 Demand Control 78
   - 4.8 Sequential Start. 79
   - 4.9 Wiring Check Operation 80
   - 4.10 Additional Refrigerant Charge Operation 81
   - 4.11 Refrigerant Recovery Mode. 82
   - 4.12 Indoor Field Setting 83
   - 4.13 Centralized Control Group No. Setting. 89
   - 4.14 Contents of Control Modes. 91
5. Caution for Refrigerant Leaks 93
   - 5.1 Caution for Refrigerant Leaks..... 93
6. Hand Over to Customer 96
   - 6.1 Operational Steps..... 96
7. Appendix 97
   - 7.1 Allowable Piping Length 97
   - 7.2 Selection of Refrigerant Pipe Size. 98
   - 7.3 Additional Charge of Refrigerant 100
   - 7.4 REFNET Pipe Connections for VRV PLUS Series..... 103
   - 7.5 VRV Inspection Sheet 109

splitoff.ru

Большая библиотека технической документации

https://splitsystema48.ru/instrukcii-po-ekspluatacii-kondicionerov.html

каталоги, инструкции, сервисные мануалы, схемы.

Si33-102.book Page ii Tuesday, June 26, 2001 3:18 PM

Part 2 Installation Manual 127

1. Introduction 128
   1.1 Introduction..... 128
   1.2 Cautions in Installation 129
   1.3 Combination 130
   1.4 Standard Operation Limit..... 131
   1.5 Standard Supplied Accessories..... 132
   1.6 Optional Accessories..... 134
   1.7 Technical Specifications..... 135
   1.8 Electrical Specifications..... 136
2. Main Components 137
   2.1 Main Components 137
3. Selection of Location.....138
   3.1 Selection of Location 138
4. Inspecting and Handling the Unit 139
   4.1 Inspecting and Handling the Unit..... 139
5. Unpacking and Placing the Unit 140
   5.1 Unpacking and Placing the Unit 140
6. Refrigerant Piping 141
   6.1 Refrigerant Piping..... 141
   6.2 Selection of Piping Material 142
   6.3 Connecting the Refrigerant Piping..... 143
   6.4 Leak Test and Vacuum Drying 148
   6.5 Pipe Insulation 149
   6.6 Additional Refrigerant Charge 150
7. Field Wiring 151
   7.1 Field Wiring..... 151
   7.2 Internal Wiring – Parts Table 152
   7.3 Optional Parts Cool/Heat Selector..... 154
   7.4 Power Circuit and Cable Requirements 155
   7.5 General..... 156
   7.6 Examples..... 157
8. Before Operation.....163
   8.1 Checks before Initial Start-Up..... 163
   8.2 Test Run 164
9. Caution for Refrigerant Leaks 167
   9.1 Caution for Refrigerant Leaks..... 167
10. Appendix of Installation 169
   10.1 Example of Connection 169

Index i

Drawings & Flow Charts iii

Все каталоги и инструкции здесь: https://splitsystema48.ru/instrukcii-po-ekspluatacii-kondicionerov.html

Si33-102.book Page 1 Tuesday, June 26, 2001 3:18 PM

Part 1
General Information

1. Product Outline 2
   1.1 Year 2001 Models Using R-22 Refrigerant..... 2
   1.2 Outline of New Series Products..... 3
   1.3 Model Configuration and Combination 5
2. Points to Bear in Mind at the System Design.....6
   2.1 Points Relating to the Performance of the Air Conditioning Units 6
   2.2 The Installation is of Vital Importance..... 7
   2.3 Striking a Balance between System Installation and General Construction Work (Comprehensive Flow Chart) 8
   2.4 Points to Bear in Mind when Preparing the Contract Drawings..... 9
3. Installation 12
   3.1 Step by Step Installation Procedure 12
   3.2 Work Involved in Individual Operations and Points to be Borne in Mind 13
4. Test Operation 60
   4.1 Procedure and Outline..... 60
   4.2 Operation when Power is Turned On 62
   4.3 Outdoor Unit PC Board Ass'y 63
   4.4 Setting Modes..... 65
   4.5 Cool/Heat Mode Selection..... 72
   4.6 Low Noise Operation 77
   4.7 Demand Control 78
   4.8 Sequential Start..... 79
   4.9 Wiring Check Operation 80
   4.10 Additional Refrigerant Charge Operation 81
   4.11 Refrigerant Recovery Mode..... 82
   4.12 Indoor Field Setting 83
   4.13 Centralized Control Group No. Setting 89
   4.14 Contents of Control Modes..... 91
5. Caution for Refrigerant Leaks 93
   5.1 Caution for Refrigerant Leaks..... 93
6. Hand Over to Customer 96
   6.1 Operational Steps..... 96
7. Appendix 97
   7.1 Allowable Piping Length 97
   7.2 Selection of Refrigerant Pipe Size..... 98
   7.3 Additional Charge of Refrigerant 100
   7.4 REFNET Pipe Connections for VRV PLUS Series..... 103
   7.5 VRV Inspection Sheet 109
   7.6 Piping System Diagrams 113
   7.7 Wiring Diagrams..... 116
   7.8 Bad Examples and Good Examples in Installation..... 118

Все каталоги и инструкции здесь: https://splitsystema48.ru/instrukcii-po-ekspluatacii-kondicionerov.html

Part1.fm Page 2 Wednesday, July 4, 2001 11:53 AM

1. Product Outline

1.1 Year 2001 Models Using R-22 Refrigerant

Outdoor Unit Series

● New model

Series name / Equivalent horsepower (HP)	16	18	20	24	26	28	30
R-22 VRV PLUS series	●	●	●	●	●	●	●

Indoor Unit Series

○ Continued model

		Type 20	Type 25	Type 32	Type 40	Type 50	Type 63	Type 80	Type 100	Type 125	Type 200	Type 250
Ceiling mounted cassette unit	2-way blow	○	○	○	○	○	○	○	—	○	—	—
	4-way blow	—	○	○	○	○	○	○	○	○	—	—
	Corner type	—	○	○	○	—	○	—	—	—	—	—
Ceiling mounted low silhoutte duct unit		○	○	○	○	○	○	—	—	—	—	—
Concealed ceiling unit		○	○	○	○	○	○	○	○	○	—	—
Concealed ceiling unit		○	○	○	○	○	○	○	○	○	—	—
Concealed ceiling unit (large)		—	—	—	○	○	○	○	○	○	○	○
Ceiling suspended unit		—	—	○	—	—	○	—	○	—	—	—
Wall mounted unit		—	○	○	○	○	○	—	—	—	—	—
Floor standing unit		○	○	○	○	○	○	—	—	—	—	—
Concealed floor standing unit		○	○	○	○	○	○	—	—	—	—	—

Все каталоги и инструкции здесь: https://splitsystema48.ru/instrukcii-po-ekspluatacii-kondicionerov.html

Si33-102.book Page 3 Tuesday, June 26, 2001 3:18 PM

1.2 Outline of New Series Products

In addition to the use of a refrigerant (R-22), the new series products incorporate a function-unit-less structure for significantly improved flexibility and ease of installation.

System outline

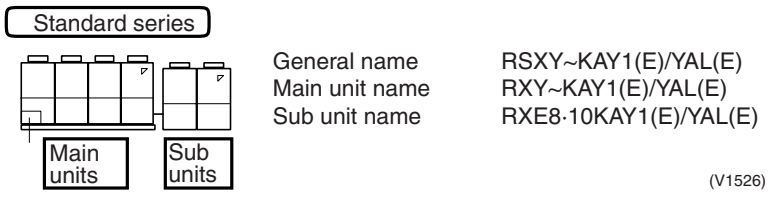

■ No function unit
All models combine main units and sub units.

■ Reduction of refrigerant charge volume (approx. 72~82% as compared to previous model.
--- Mainly by elimination of function units, simplification of refrigerant circuits and reduction of internal volume.

Feature (2)

■ Dramatically improved flexibility and ease of field installation by function-unit-less structure
--- Simpler piping work at installation sites
--- Reduced unit installation area

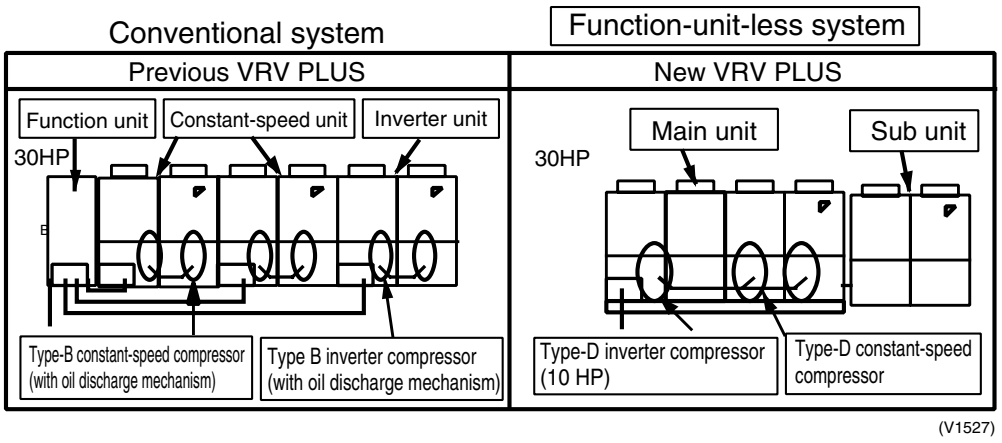

Feature (3)

■ Reduction of installation area

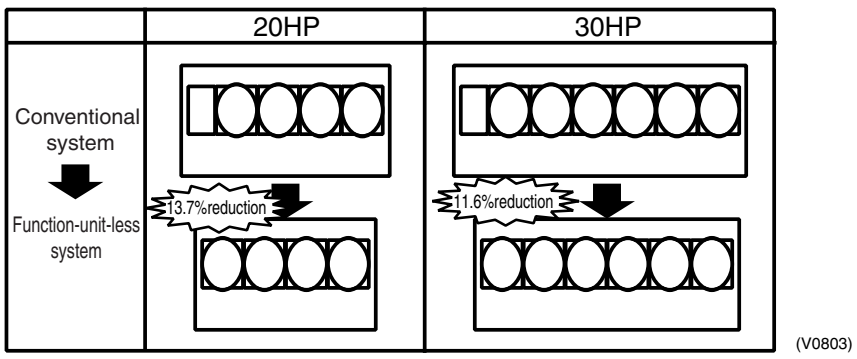

■ Simpler piping work at installation sites

	20HP	30HP
Pipe connecting locations	14 joints → 6 joints	20 joints → 6 joints

Все каталоги и инструкции здесь: https://splitsystema48.ru/instrukcii-po-ekspluatacii-kondicionerov.html

Si33-102.book Page 4 Tuesday, June 26, 2001 3:18 PM

Other versatile functions are provided

- **Long refrigerant piping : equivalent length of 125, actual length of 100 m and height difference of 50 m.**
- **Connection of indoor unit of varying capacities and types totaling 130% (max.) of outdoor unit by capacity.**

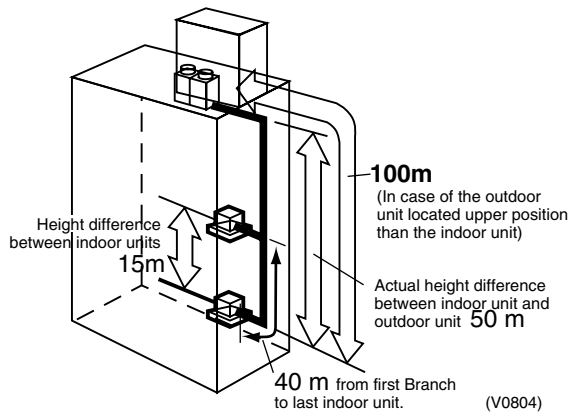

- **Individual control of up to 20 indoor units with one 20HP class outdoor unit**

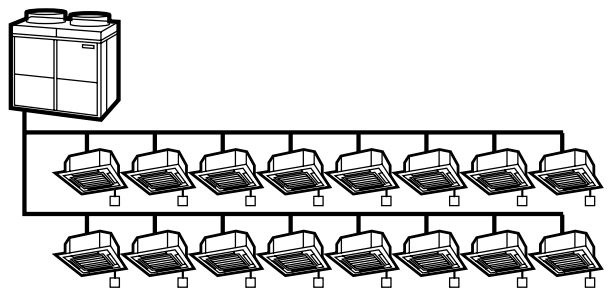

- For VRV PLUS

Outdoor unit name	No. of indoor units connectable
RSXY16~20KAY1(E)/YAL(E)	20 units
RSXY24~30KAY1(E)/YAL(E)	32 units

- **Others**
- High efficiency with power factor of 90% or higher
- Cooling operation with outdoor air temperature as low as –5˚C
- Heating operation with outdoor air temperature as low as –15˚C
- Simple REFNET piping system
- Super wiring system
- Automatic address setting function
- Built-in wiring error check function
- Equipped with sequential start function
- Nighttime low-noise mode for reduced operating sound

Все каталоги и инструкции здесь: https://splitsystema48.ru/instrukcii-po-ekspluatacii-kondicionerov.html

Part1.fm Page 5 Wednesday, July 4, 2001 11:53 AM

1.3 Model Configuration and Combination

Number of units and capacity of connectable indoor units

Standard series	Equivalent output		16HP	18HP	20HP	24HP
	R-22 VRV PLUS series system model		RSXY16KAY1(E)/ YAL(E)	RSXY18KAY1(E)/ YAL(E)	RSXY20KAY1(E)/ YAL(E)	RSXY24KAY1(E)/ YAL(E)
	Outdoor unit combination	Main unit	RXY8KAY1(E)/ YAL(E)	RXY10KAY1(E)/ YAL(E)	RXY10KAY1(E)/ YAL(E)	RXY16KAY1(E)/ YAL(E)
		Sub unit	RXE8KAY1(E)/ YAL(E)	RXE8KAY1(E)/ YAL(E)	RXE10KAY1(E)/ YAL(E)	RXE8KAY1(E)/ YAL(E)
	Total number of connectable indoor units		Up to 20 units			Up to 32 units
	Total capacity of connectable indoor units		200~520	225~585	250~650	300~780

Standard series	Equivalent output		26HP	28HP	30HP
	R-22 VRV PLUS series system model		RSXY26KAY1(E)/ YAL(E)	RSXY28KAY1(E)/ YAL(E)	RSXY30KAY1(E)/ YAL(E)
	Outdoor unit combination	Main unit	RXY16KAY1(E)/YAL(E)	RXY20KAY1(E)/YAL(E)	RXY20KAY1(E)/YAL(E)
		Sub unit	RXE10KAY1(E)/YAL(E)	RXE8KAY1(E)/YAL(E)	RXE10KAY1(E)/YAL(E)
	Total number of connectable indoor units		Up to 32 units		
	Total capacity of connectable indoor units		325~845	350~910	375~975

Y1 : 3 phase, 380~415V, 50Hz
YAL : 3 phase, 380V, 60Hz
(E) : Salt damage resistant specifications

Connectable indoor unit

Indoor unit		Model name
Ceiling mounted cassette unit	2-way blow	FXYC20KVE·25KVE·32KVE·40KVE·50KVE·63KVE·80KVE·125KVE
	4-way blow	FXYF25KBVE·32KBVE·40KBVE·50KBVE·63KBVE·80KBVE·100KBVE·125KBVE
	Corner type	FXYK25KV1/VAL·32KV1/VAL·40KV1/VAL·63KV1/VAL
Ceiling mounted low silhoutte duct unit		FXYD20KAVE·25KAVE·32KAVE·40KAVE·50KAVE·63KAVE
Concealed ceiling unit		FXYS20KV1/VAL·25KV1/VAL·32KV1/VAL·40KV1/VAL·50KV1/VAL·63KV1/VAL·80KV1/VAL·100KV1/ VAL·125KV1/VAL
Concealed ceiling unit		FXYB20KV1·25KV1·32KV1·40KV1·50KV1·63KV1·80KV1·100KV1·125KV1·
Concealed ceiling unit (large)		FXYM40KVE·50KVE·63KVE·80KVE·100KVE·125KVE·200KJVE·250KJVE
Ceiling suspended unit		FXYH32KVE·63KVE·100KVE
Wall mounted unit		FXYA25KVE·32KVE·40KVE·50KVE·63KVE
Floor standing unit		FXYL20KJVE·25KJVE·32KJVE·40KJVE·50KJVE·63KJVE
Concealed floor standing unit		FXYLM20KJVE·25KJVE·32KJVE·40KJVE·50KJVE·63KJVE

VE : 1 phase, 220~240V/220V, 50/60Hz
V1 : 1 phase, 220~240V, 50Hz
VAL : 1 phase, 220V, 60Hz

Indoor unit capacity

New refrigerant model code	20 type	25 type	32 type	40 type	50 type	63 type	80 type	100 type	125 type	200 type	250 type
Selecting model capacity	2.2kW	2.8kW	3.5kW	4.5kW	5.6kW	7.0kW	9.0kW	11.2kW	14.0kW	22.4kW	28.0kW
Equivalent output	0.8HP	1HP	1.25HP	1.6HP	2.0HP	2.5HP	3.2HP	4HP	5HP	8HP	10HP

Use the above tables to determine the capacities of indoor units to be connected. Make sure the total capacity of indoor units connected to each outdoor unit is within the specified value (kW).

- The total capacity of connected indoor units must be within a range of 50 to 130% of the rated capacity of the outdoor unit.
- In some models, it is not possible to connect the maximum number of connectable indoor units. Select models so the total capacity of connected indoor units conforms to the specification.

Все каталоги и инструкции здесь: https://splitsystema48.ru/instrukcii-po-ekspluatacii-kondicionerov.html

Si33-102.book Page 6 Tuesday, June 26, 2001 3:18 PM

2. Points to Bear in Mind at the System Design

2.1 Points Relating to the Performance of the Air Conditioning Units

A number of points need to be borne in mind at the system design stage in order to ensure the mechanical efficiency of the air conditioning units.

1. Path of refrigerant piping between outdoor and indoor units, height difference and pipe length.

- Path of refrigerant piping should be determined such that lenght of piping is kept to a minimum.
- Piping should be kept within permissible limits in terms of length and height difference.

2. Positioning of outdoor unit

- Position such that maintenance and repairs can be carried out. (leave room for servicing)
- Avoid reduction of airflow and short circuiting

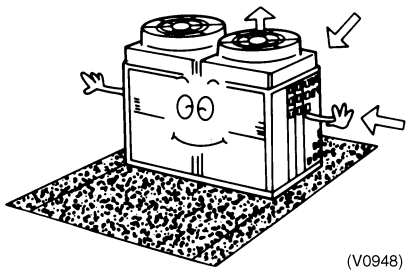

(V0948)

- Avoid reduction of airflow and short circuiting

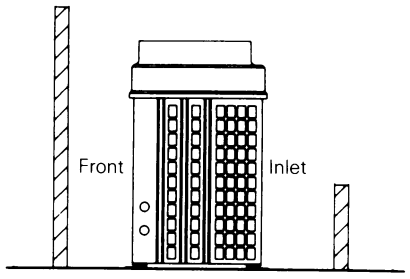

(V0949)

3. Positioning of indoor unit

- Position such that maintenance and repairs can be carried out. (inspection port positions and size check)
- Avoid short circuiting
- Ensure sufficient drain pipe gradient (need for drain-up kit etc.)
- In the case of a ceiling mounted type make sure ceiling depth is sufficient (need for high performance filter, etc.)

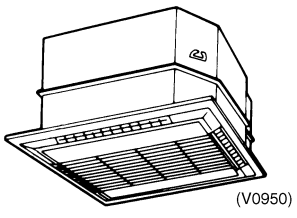

(V0950)

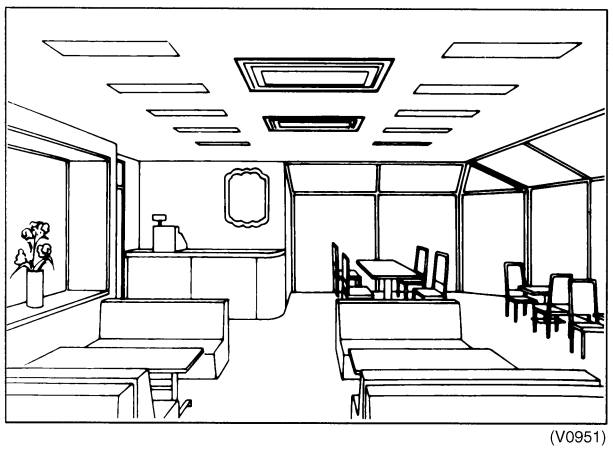

(V0951)

Все каталоги и инструкции здесь: https://splitsystema48.ru/instrukcii-po-ekspluatacii-kondicionerov.html

Si33-102.book Page 7 Tuesday, June 26, 2001 3:18 PM

2.2 The Installation is of Vital Importance

The analysis of major installation problems experienced during the year of 1988 is shown below;

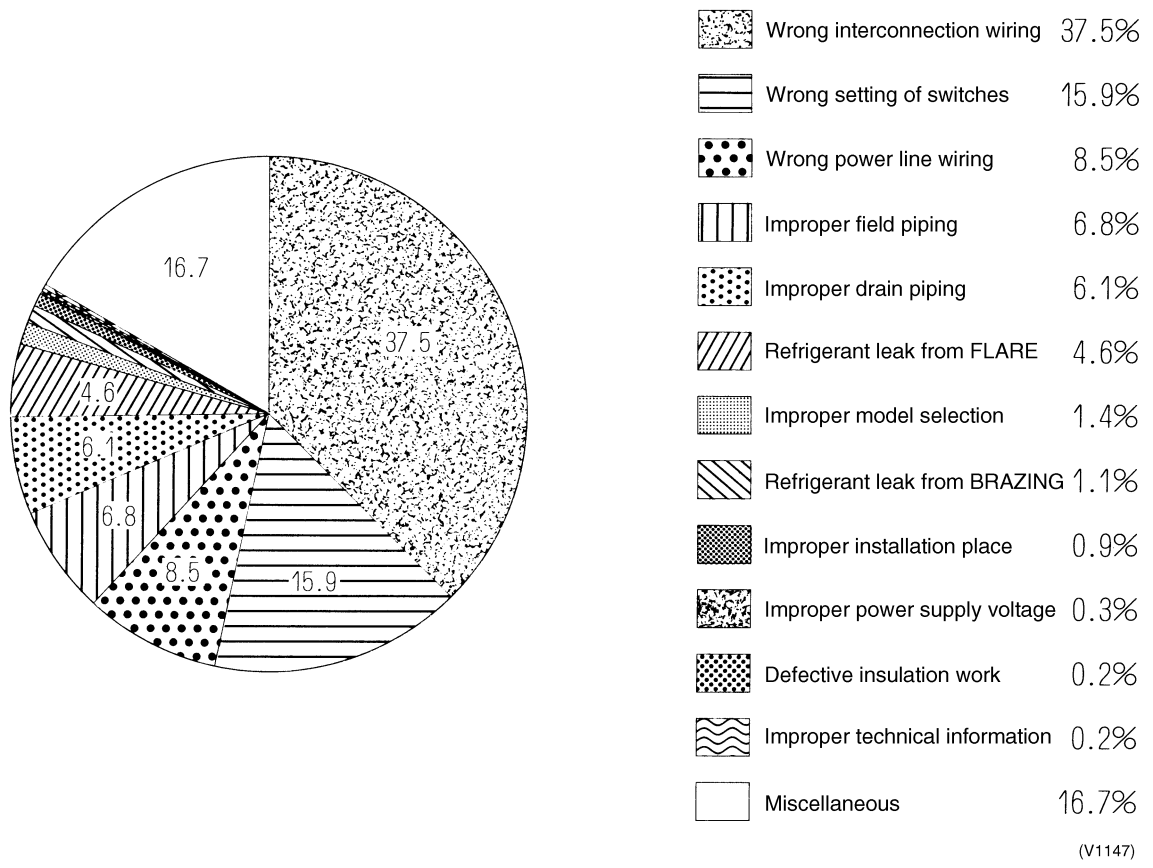

How these installation problems affect an equipment are shown below:

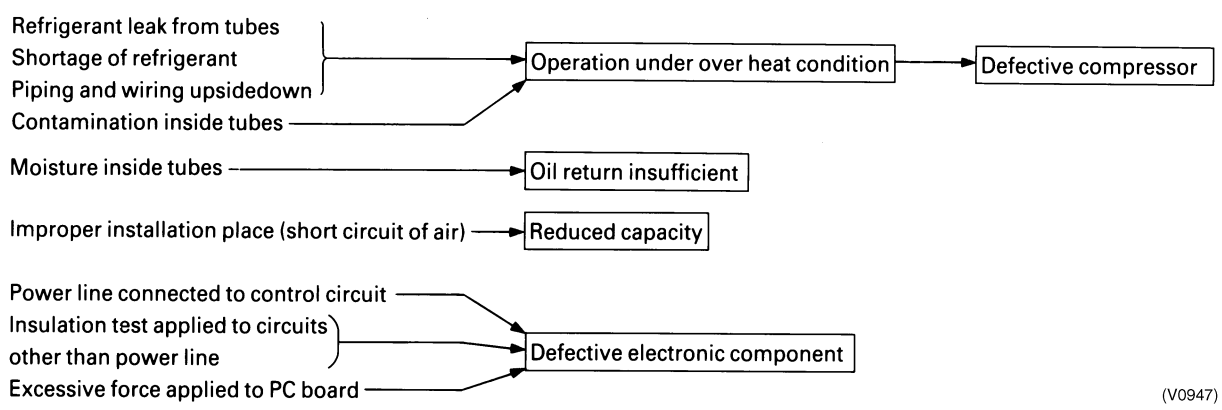

Все каталоги и инструкции здесь: https://splitsystema48.ru/instrukcii-po-ekspluatacii-kondicionerov.html

Si33-102.book Page 8 Tuesday, June 26, 2001 3:18 PM

2.3 Striking a Balance between System Installation and General Construction Work (Comprehensive Flow Chart)

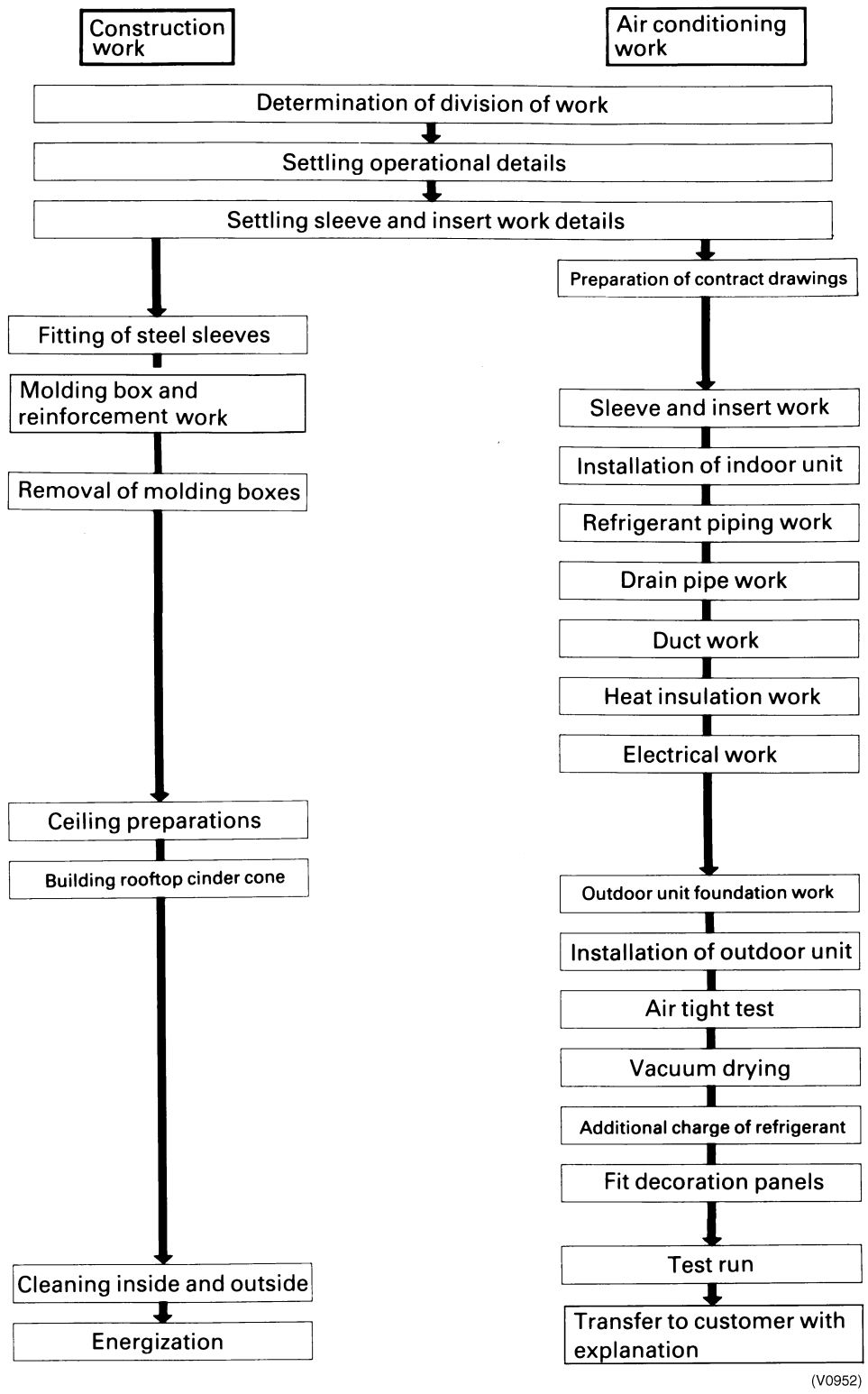

Note:

1. The division of the work should be thoroughly clarified. (This applies particularly to work relating to the connection of control wiring, fitting of remote control and central control panel, boundary work on areas such as connection of drain piping and humidification supply piping, inspection and foundation)
2. Keep a constant check on the progress of the construction work to avoid deviations from the air conditioning work schedule.
3. For sleeve and insert work the positions of ceiling girders should be confirmed and sleeve and insert requirement, hole diameters, positioning and numbers decided. This is particularly important in the case of sleeves for drain piping.

Все каталоги и инструкции здесь: https://splitsystema48.ru/instrukcii-po-ekspluatacii-kondicionerov.html

Si33-102.book Page 9 Tuesday, June 26, 2001 3:18 PM

2.4 Points to Bear in Mind when Preparing the Contract Drawings

The following points should be borne in mind when preparing the contract drawings from the original drawings and the execution drawings.
The contract drawings for the air conditioning system are blueprints for the performance of the necessary work which are drawn up on the basis of the original drawings in such a way that a working balance is achieved between the specific requirements of each individual aspect of the work.

Contract Drawing

Objectives include:
- The drawings should be easily comprehensible to those carrying out the work.
- The contents of the drawings should not be subject to subsequent alteration.

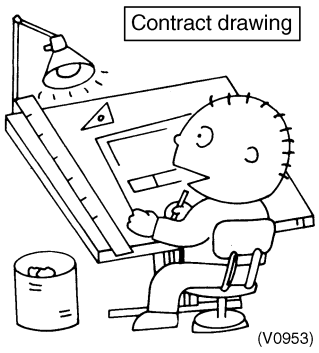

The following is a list of the main points to be considered when preparing contract drawigns for the VRV System and should be used as a reference during this stage of the work:

2.4.1 At the Contract Drawing Stage the Following Points are Critical!!

	Check points
Arrangement of units	1. Have you left the access passages clear and allowed sufficient room for servicing? 2. Have you taken full account of the possibility of short circuits? (Both indoor and outdoor units) 3. Can the air filters be replaced easily? 4. Have you indicated the size and location of the ceiling inspection ports? (Make sure there no other installations in the area above) 5. Have you taken into account the depth of the installation area? (In case of ceiling built-in type) 6. Have you specified the position of the indoor unit clearly? (Have you taken full accout of relevant features of the local ventilation, humidity and lighting?)
Refrigerant piping	1. Is the piping system correctly connected? 2. Are the rise and fall pipes correctly connected? 3. Are the lengths and height differences of the pipes within the recommended limits?
Operational control	1. Are the interconnections between the piping and wiring of the indoor and outdoor units clearly shown? 2. Are the numbers of the local setting switches clearly shown? (Group No. and Unit No.) 3. Are the wiring connections between the remote control and the centralized and remote controls clearly shown? **Refer to the notes relating to the preparation of the control wiring system diagrams (see next page)** 4. Are the different types of wires clearly marked? 5. Are the any problems with the way the power supply cables and control wiring have been separated or bound together? 6. Are the inter-floor connections of the control wiring correct? 7. Is the position of the remote control clearly marked?
Miscellaneous	1. Have you checked the gradient of the drain piping? (Must be at least 1/100)

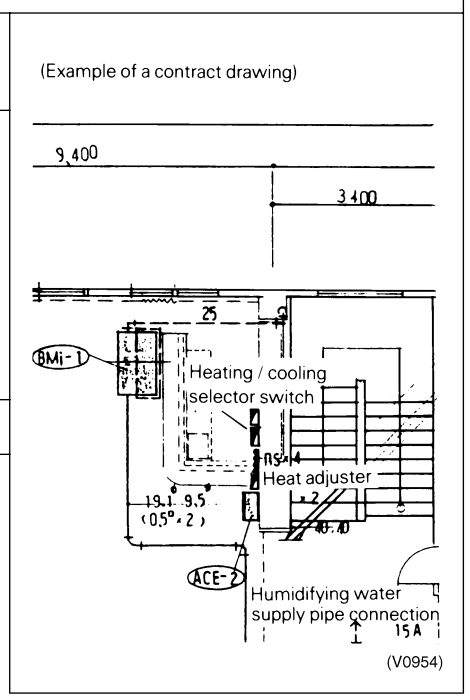

Все каталоги и инструкции здесь: https://splitsystema48.ru/instrukcii-po-ekspluatacii-kondicionerov.html

Si33-102.book Page 10 Tuesday, June 26, 2001 3:18 PM

2.4.2 Main Considerations in Preparation of Control Circuit Diagrams

In addition to the design of the appropriate this system configuration it is also essential that the control stsyem be made amply clear. If the system is designed and installed without a clear, comprehensive plan then problems are inevitably going to occur during the test run.
Servicing too will become much more time consuming than necessary. However, if control circuit diagrams are prepared along with the contract drawings in order to make the total system clearly visible then the essential points relating to the electrical connections will be easily understood, the test run will go off without a hitch and the whole system will be rendered fully effective.

Step 1: Compiling a System List (example using Inverter K Series)

1. Mark each outdoor unit with a code.
2. Add field settings and data for outdoor units, and outdoor unit No. if using sequential start.
3. Add the model number of each indoor unit connected to each refrigerant circuit.
4. Assign each indoor unit a code.
5. Fill in the location of each indoor unit.
6. Group indoor units controlled by one or two remote controls. (group or individual control).
7. Assign central group Nos. if using centralized control.
8. Add field settings and optional equipment for indoor units.
9. Add unit No. if making separate field settings for each indoor unit under group control.

Note: With the R-22 PLUS Series, unit No. is determined through automatic addressing, therefore readout unit Nos. after activating the power.

Example: System list

Outdoor Unit		Indoor Unit						
Model Name (code)	Field Settings	Model Name	System Name	Location	Remote Control Group	Centralized Control Group No.	Unit No.	Optional equipment, field settings, etc.
RSXY16KA (PAC1)	Cool/Heat selector: Indoor unit Low noise operation (L.N.O.P): Individual control Sequential start: ON Defrost: Earlier Sequential start No.	FXYC32K	2F01	2nd floor office	A	1–00		
		FXYC63K	2F02	2nd floor office	A	(1–00)		
		FXYC40K	2F03	2nd floor office	A	(1–00)		
		FXYC63K	2F04	2nd floor office	B	1–01		
		FXYC50K	2F05	2nd floor office	B	(1–01)		
RSXY18KA (PAC2)	Cool/Heat selector: Indoor unit Low noise operation (L.N.O.P): Individual control Sequential start: ON Defrost: Earlier	FXYC32K	3F01	3rd floor office	C	1–02		
		FXYC40K	3F02	3rd floor office	C	(1–02)		
		FXYC50K	3F03	3nd floor office	C	(1–02)		
		FXYC50K	3F04	3rd floor office	D	1–03		

For details on field settings and centralized control group No., refer to the installation manual and system reference materials.

Все каталоги и инструкции здесь: https://splitsystema48.ru/instrukcii-po-ekspluatacii-kondicionerov.html

Si33-102.book Page 11 Tuesday, June 26, 2001 3:18 PM

Step 2: Preparation of the Control Circuit Diagrams

The following sequence should be followed in order to prepare control circuit diagrams in accordance with the system list which has already been completed:

① Diagrams should be prepared for each individual outdoor unit. The outdoor unit model number should be inserted into the diagram. (RSXY16KA)
② Insert name of refrigerant system. (PAC1, PAC2)
③ Insert name of indoor unit. (FXYC32K→C32K)
④ Insert system name of indoor unit.
⑤ Insert installation position. (Do this when demarcation is possible)
⑥ Insert remote control control wiring. (Group) Indicated by solid line. .....Solid line.
⑦ Insert centralized control wiring. .....Dotted line
⑧ Insert Group No. (GNo. for each indoor unit with UNo. 0)

The control circuit diagrams are now complete.

Example: Control circuit diagram

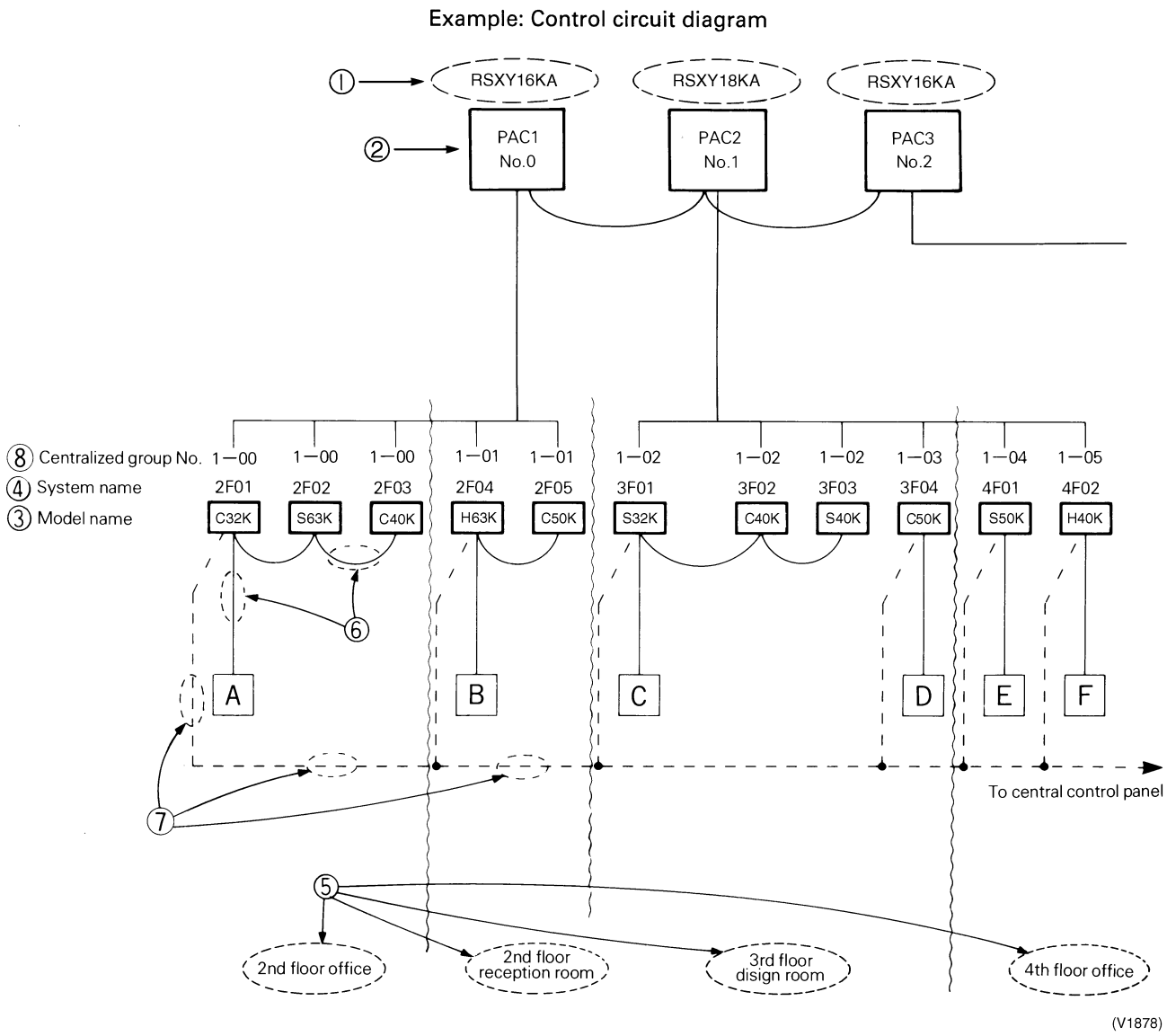

Все каталоги и инструкции здесь: https://splitsystema48.ru/instrukcii-po-ekspluatacii-kondicionerov.html

Si33-102.book Page 12 Tuesday, June 26, 2001 3:18 PM

3. Installation

3.1 Step by Step Installation Procedure

	〈Operations〉	〈Points〉
Prework	Determination of division of work	Indicate clearly who is to be responsible for switch settings
	Preparation of contract drawings	Make relationship between outdoor, indoor, remote controller and option connections clear. (Prepare control circuit diagrams)
Work	Sleeve and insert work	Take account of gradient of drain piping
	Installation of indoor unit	Check model name to make sure the fitting is made correctly
	Refrigerant piping work	Special attention to dryness, cleanness and tightness
	Drain pipe work	Adjust to downward gradient
	Duct work	Make sure airflow is sufficient.
	Heat insulation work	Make sure no gaps are left where the insulating materials are joined
	Electrical work (connection circuits and drive circuits)	Multiple core cable must not be used. (Suitable cable should be selected)
	Setting of indoor unit setting switches	Must be carried out in strict accrdance with control circuit diagrams
	Outdoor unit foundation work	The foundation must be level
	Installation of outdoor unit	Avoid short circuits and ensure sufficient space is allowed for servicing
	Setting of outdoor unit setting switch	Must be carried out in strict accrdance with control circuit diagrams (Sequence start, low noise input, Cooing/Heating selection refrigerant piping lenglh etc.)
	Air tight test	In the final check for 24 hours at 2.74 MPa there must be no drop in pressure
	Vacuum drying	The vacuum pump used must have a capacity of reaching at least 5 mmHg
	Addtional charge of refrigerant	Make sure there are no gaps left between the facing materials used on the ceiling
	Fit facing panels	Make sure there are no gaps left between the facing matarials used on the ceiling
	Test run adjustment	Run each indoor unit in turn to make sure the pipework has been fitted correctly
	Transfer to customer with explanation	Explain the use of the system as clearly as possible to your customer and make sure all relevant documentation is in order

(V1662)

The above list indicates the order in which the individual work operations are normally carried out but this order may be varied where local conditions warrant such a change.

Все каталоги и инструкции здесь: https://splitsystema48.ru/instrukcii-po-ekspluatacii-kondicionerov.html

Si33-102.book Page 13 Tuesday, June 26, 2001 3:18 PM

3.2 Work Involved in Individual Operations and Points to be Borne in Mind

3.2.1 Sleeve and Insert Work

■ **Operational steps**

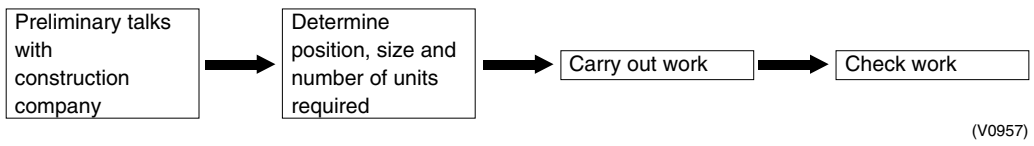

Positioning of the Pipe Holes

a) The through holes for the drain piping should be positioned such that the pipes have a downward gradient. (The gradient must be at least 1/100. The thickness of the insulating materials must also be taken into consideration.)
b) The diameter of the through holes for the refrigerant piping should include an allowance for the thickness of the heat insulation materials. (It is a good idea to think of the liquid and gas pipes as pairs.)
c) Attention should be paid to the construction of the beam themselves since there are sometimes parts of the beam which cannot be used to accommodate through holes.

Example: Through holes in a reinforced concrete beam

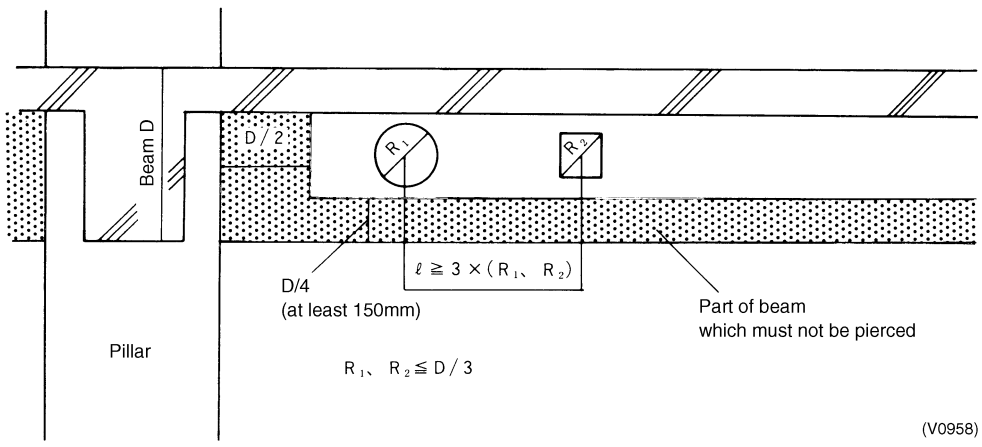

Positioning the Insert

a) An insert is a metal tool which is inserted into a floor or a beam before the concrete is set such that fittings such as ducts, pipes or suspension bolts for hanging units can be fitted into place later. **The positions of the inserts must be decided early.**

Example: Steel insert

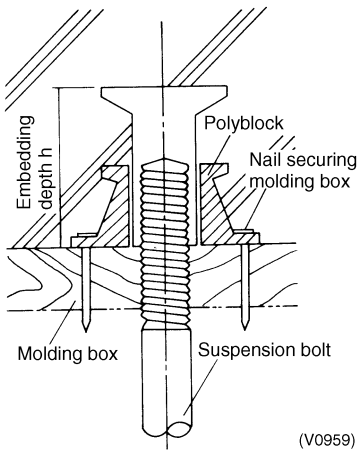

Important point:
1. The weight of the fitting to be suspended must be taken into account when choosing the insert.

Все каталоги и инструкции здесь: https://splitsystema48.ru/instrukcii-po-ekspluatacii-kondicionerov.html

Si33-102.book Page 14 Tuesday, June 26, 2001 3:18 PM

3.2.2 Installation of Indoor Unit

■ **Operational steps**

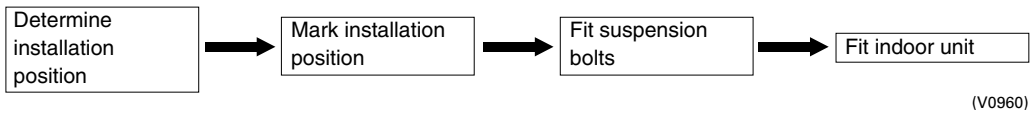

Positioning

3 essential points when installing an indoor unit

1. Height: Take care to accout for final ceiling facing surface level
2. Level: Level fitting is essential. (within ±1 degree of horizontal)
3. Direction: The unit must be fitted in line with the ultimately visible ceiling joints

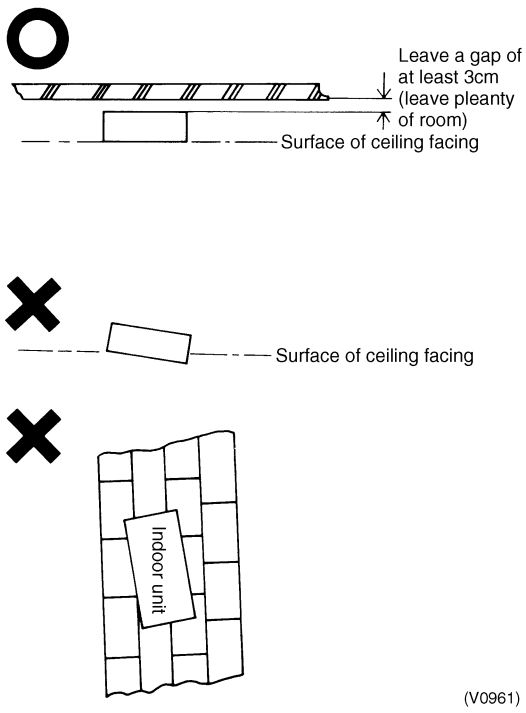

Important points

1. The suspension bolts must be strong enough to support the weight of the indoor unit.
2. Optional features must be added to the indoor unit prior to installation.
3. The model name should be checked prior to installation.
4. Take care to align the main unit correctly. (Bearing in mind piping layout and direction of blow out)
5. Leave sufficient space for servicing to be carried out.
6. Make inspection holes for model which need them.
7. Fit the unit to ensure proper drainage.

Example: Ceiling mounted cassette unit (FXYC63K)

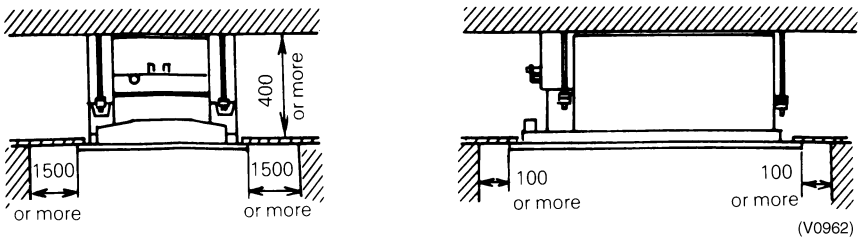

Все каталоги и инструкции здесь: https://splitsystema48.ru/instrukcii-po-ekspluatacii-kondicionerov.html

Si33-102.book Page 15 Tuesday, June 26, 2001 3:18 PM

3.2.3 Refrigerant Pipe Work

■ **Operational steps**

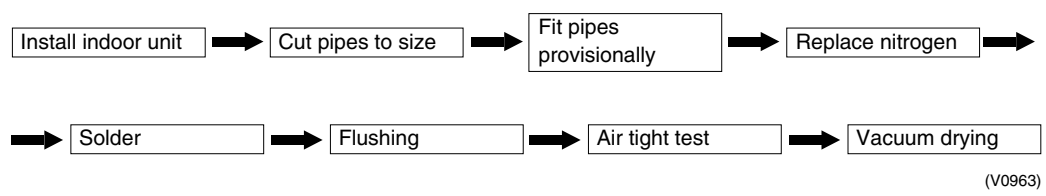

The 3 Principles of Refrigerant Piping

The “3 principles of refrigerant piping” must be strictly observed

	Cause of problem	Actoin to avoid problem
Dry	● Rainwater, work water, etc. gets into pipes from outside ● Moisture generated inside pipes due to condensation	Pipe covering → Flushing → Vacuum drying
Clean	● Formation of oxides inside pipes during soldering ● Dirt, dust or other extraneous material gets into pipes from outside	Replace nitrogen Pipe covering → Flushing
Air tight	● Leak from soldered area ● Leak from flared area ● Leak from flange area	Use the proper materials (copper pipe, solder, etc.) Adhere strictly to standard soldering work practice Adhere strictly to standard flaring work practice Adhere strictly to standard flange connection work parctice → Air tight test

(V0964)

The 3 princples of refrigerant piping

Dry	Clean	Air tight
Make sure there is no moisture inside the pipes	Make sure there is no dirt inside the pipe	Make sure the refrigerant does not leak out
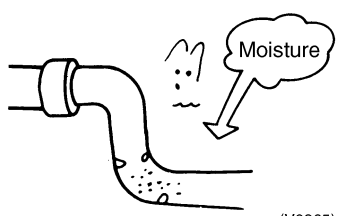 (V0965)	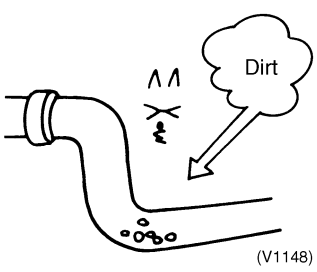 (V1148)	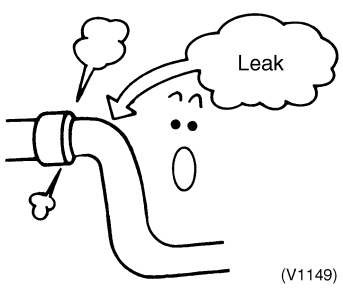 (V1149)

Все каталоги и инструкции здесь: https://splitsystema48.ru/instrukcii-po-ekspluatacii-kondicionerov.html

Si33-102.book Page 16 Tuesday, June 26, 2001 3:18 PM

Method for Replacing Nitrogen (Brazing)

If brazing work is carried out without passing nitrogen gas through the pipes which are being brazed then this allows the formation of oxidation bubbles on the inside surface of the pipes. These oxidation bubbles are then carried along inside the pipes to cause damage to various members of the system such as valves or compressors and the system ceases to function properly.

In order to avoid this problem **nitrogen is passed through the pipes while the soldering work is being carried out**. This operation is known as nitrogen replacement. (Air is replaced by nitrogen)

This is **standard work practice for all brazing work**.

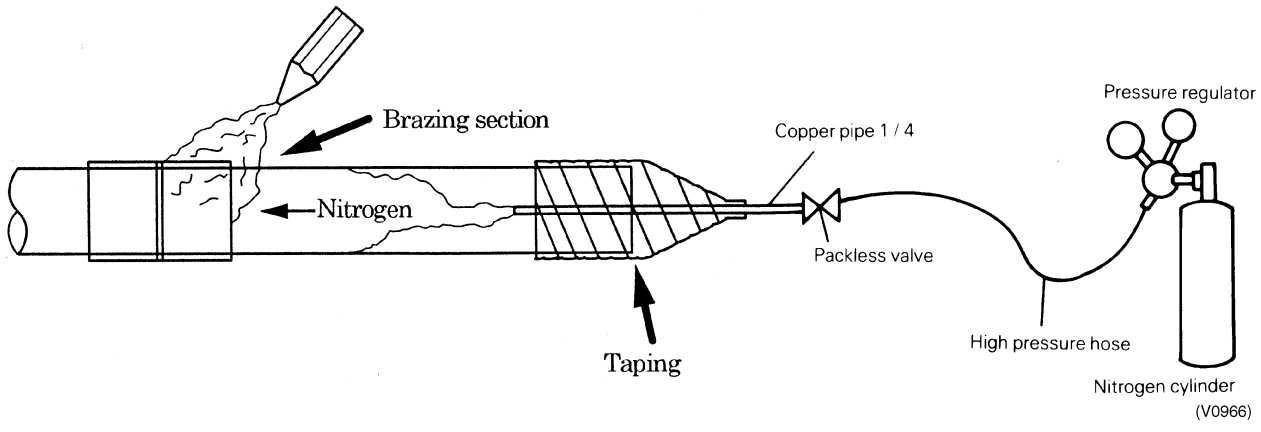

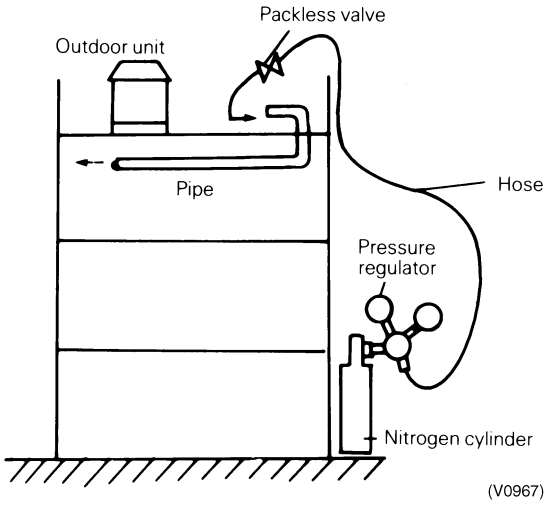

Important points:

1. The gas used must be nitrogen (oxygen, carbon dioxide and refrigerant should not be used.)
2. A pressure regulator must be used.

Все каталоги и инструкции здесь: https://splitsystema48.ru/instrukcii-po-ekspluatacii-kondicionerov.html

Si33-102.book Page 17 Tuesday, June 26, 2001 3:18 PM

Covering of Refrigerant Pipes

Covering is an extremely important operation as it prevents water, dirt or dust from getting inside the pipes. Moisture inside the pipes was a constant source of trouble in the past. The utmost care is required to nip this problem in the bud.

The end of each pieces of pipe must be covered. “Pinching” is the most effective method but “taping” is an simple alternative which may be used according to the work area and term of work.

Location	Term of Work	Covering Method
Outdoors	1 months or more	Pinching
	Less than 1 months	Pinching or taping
Indoors	Irrelevant	Pinching or taping

1. Pinching method
   The end of the copper pipe is squeezed together and the gap brazed.
2. Taping method
   The end of the copper pipe is covered with PVC tape (vinyl tape).

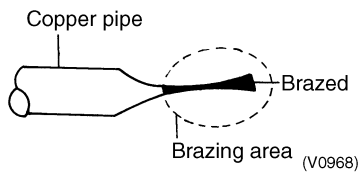

<Taping method>

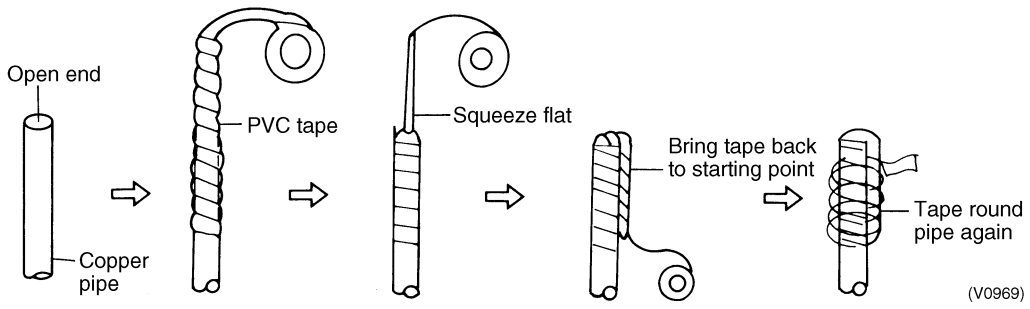

Particular care should be taken during the following operations:

- When passing copper pipe through a penetration hole (Dirt easily gets into the pipe).
- When copper pipe is located outside (Rainwater gets in)
  (Special care is needed when the pipes are standing vertically outside)

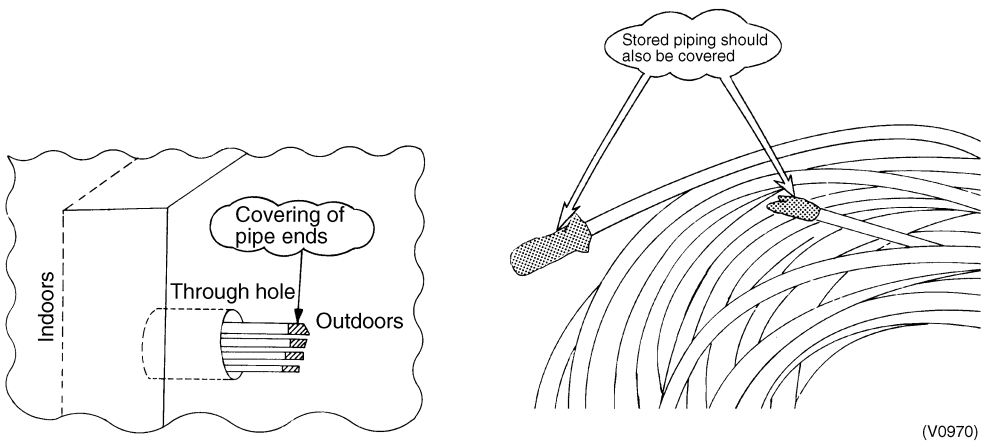

Все каталоги и инструкции здесь: https://splitsystema48.ru/instrukcii-po-ekspluatacii-kondicionerov.html

Si33-102.book Page 18 Tuesday, June 26, 2001 3:18 PM

Refrigerant Pipe Flushing

Flushing is a method of cleaning extraneous matter out of pipes using pressurized gas.

[3 major effects]

1. Removal of oxidation bubbles formed inside copper pipes when “nitrogen replacement is insufficient” during soldering work
2. Removal of extraneous material and moisture from pipes when covering has been insufficient
3. Checks connections in pipes linking outdoor and indoor units (Both liquid and gas pipes)

[Example of procedure]

1. Set pressure regulator on nitrogen cylinder.
   ∗The gas used must be nitrogen.
   (There is a danger of condensation if fluon or carbon dioxide are used and oxygen carries the risk of explosions.)

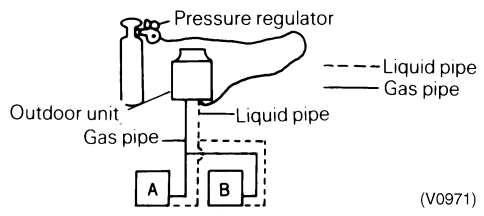

2. Connect the charge hose from the pressure regulator to the service port on the liquid pipe side of the outdoor unit.
3. Fit blanking plugs to all indoor units (B) other than unit A.

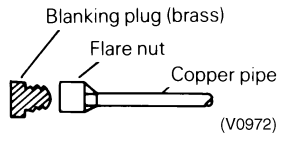

4. Open the main valve on the nitrogen cylinder and set the pressure regulator to 0.5MPa.

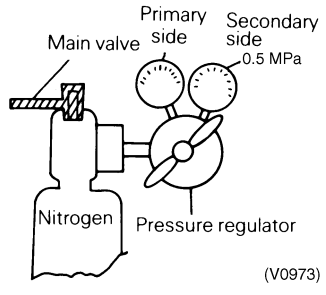

5. Check that the nitrogen is passing through the unit A liquid pipe.
6. Flushing.

■ Block the end of the pipe with the insulation of your hand.
↓
■ When the gas pressure becomes too great to contain remove insulation quickly. (First flush)
↓
■ Block the end of the pipe with insulation again.
↓
(Carry out second flushing)

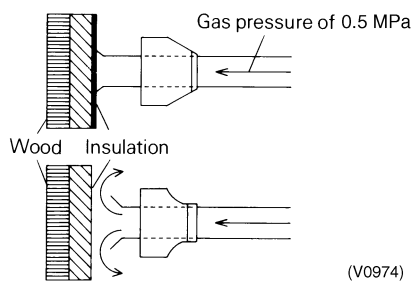

Все каталоги и инструкции здесь: https://splitsystema48.ru/instrukcii-po-ekspluatacii-kondicionerov.html

Si33-102.book Page 19 Tuesday, June 26, 2001 3:18 PM

(The nature and amount of the extraneous material inside the pipe can be checked during flushing by placing a rag lightly over the end of the pipe. In the unlikely case that even a small quantity of moisture is found then the inside of the pipe should be dried out thoroughly.)

Action:

1. Flush the inside of the pipe with nitrogen gas. (Until such time as the moisture disappears.)
2. Carry out a thorough vacuum drying operation. (See page 29)
   ① Close the main valve on the nitrogen cylinder.
   ② Repeat the above operation for unit B.
   ③ When the liquid pipe operations have been completed then do the same with the gas pipes.

Choice of Materials for Refrigerant Piping

a) Refrigerant piping

- The piping used must meet the requirements of the JIS standard or equivalent. (Size, material, thickness,etc.)
  Specification: **Oxidized phosphorous seamless copper pipe**
- Long pipe lengths or coiled pipe (copper pipe with heat insulation coating) should be used to avoid the necessity for frequent brazing.
- The whole job is made easier if rolled copper pipe with a heat insulation coating is used.

Size of Refrigerant Piping

Outside Diameter (mm)	Wall Thickness (mm)
6.4	0.8
9.5	0.8
12.7	0.8
15.9	1.0
19.1	1.0
22.2	1.2
25.4	1.2
28.6	1.2
31.8	1.2
34.9	1.3

b) Brazed joints and special branches

1. General use (L bend joint, socket joint, T joint, etc.)

- Joints must meet the requirements of the relevant JIS standard. (Size, materials, thickness, etc.)

2. Special branches

- The Daikin REFNET joint or REFNET header should be used.

Example: R-22 PLUS Series

	REFNET joint	REFNET header		
		4 branches	6 branches	8 branche
Liquid pipe (with heat insulation coating)				
Gas pipe (with heat insulation coating)				

(V0975)

Refer detail of DAIKIN REFNET joint and REFNET header on page 103.

Все каталоги и инструкции здесь: https://splitsystema48.ru/instrukcii-po-ekspluatacii-kondicionerov.html

Si33-102.book Page 20 Tuesday, June 26, 2001 3:18 PM

c) Brazing

The Multi-System requires only copper/copper jointing and the jointing method is explained below.

■ The use of “hard solder” is essential.

Type	Solder: JIS mark	Soldering temperature (°C)	Breaking strengh (kg/mm^2)	Soldering method	Jointing distance (mm)	Example for reference (product name)	Flux (example for reference)	Remarks
Hard solder	BCup-2 (Phosphor copper solder)	735 ~ 840	Approx. 25	0.05 ~ 0.2	Gas	NEiS # 2BD	Not required	BCup reacts easily with sulfur to form a fragile water-soluble compound and should not therefore be used where the environment is not suitable.
	BAg-2 (Silver solder)	700 ~ 845	Approx. 20	0.05 ~ 0.2	Gas	NEiS # 107	NEiS # 103	Suitable for environments with a high sulfur content

This is used under normal conditions.
(V0976)

The R-22 Plus Series uses a wide range of piping sizes. You should therefore be careful when selecting the nozzle tip. If a small nozzle tip is used for brazing piping of large diameters such as ϕ38.1 and ϕ44.5, brazing flow becomes poor.

Table 1: Correlation of nozzle tip and size of refrigeration piping

Piping size	Nozzle tip No. # 200	# 225	# 250	# 315	# 400	# 450	# 500	Brazing filler diameter ϕ 1.6	2.4	3.2
6.35										
9.53										
12.7										
15.9										
19.1										
22.2										
25.4										
31.8										
38.1										
44.5										

(V0977)

Note: The values in the table above are for type B torch (French).

Все каталоги и инструкции здесь: https://splitsystema48.ru/instrukcii-po-ekspluatacii-kondicionerov.html

Si33-102.book Page 21 Tuesday, June 26, 2001 3:18 PM

Brazing

a) Brazing work should be carried out such that the final result is directed either downwards or sideways. An upward direction should be avoided wherever possible. (to prevent leakage)

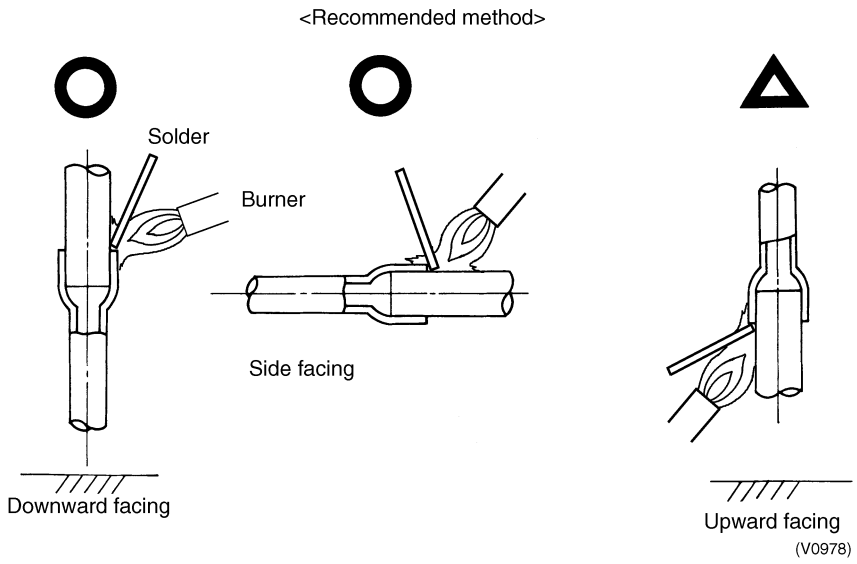

b) Liquid and gas pipe branches should always be dealt with in the specified way with attention being paid to the direction of the fitting and its angle. (to prevent oil return or drift) For example see page 122.
c) It is standard working practice to use the nitrogen replacement method when brazing.

Important points

1. Every effort must be made to avoid fire. (Clean area where brazing is to be performed and make sure that fire fighting equipment and water are ready to hand.)
2. Be careful of burns.
3. Make sure that the gap between the pipe and the joint is correct. (To prevent leaks)
4. Is the pipe adequately supported?

■ As a rule the gaps between supports for horizontal piping (copper pipe) are as follows:

Copper pipe support spacing (From HASS 107-1977)

Nominal diameter	20 or less	25~40	50
Maximum gap (m)	1.0	1.5	2.0

■ The copper pipe should not be secured directly by metal brackets.

Все каталоги и инструкции здесь: https://splitsystema48.ru/instrukcii-po-ekspluatacii-kondicionerov.html

Si33-102.book Page 22 Tuesday, June 26, 2001 3:18 PM

Flare Connection

(a) Stiffened pipe must always be annealed at least once prior to the flaring work.
(b) A pipe cutter must be used to cut the pipe. (A large pipe cutter must be used where the pipe has a large diameter. When cutting a pipe which is too big for the pipe cutter a metal saw may be used but care must be taken to ensure that the debris from sawing does not get into the pipe.)
(c) Set the flaring tool to make sure the flare size remains within the prescribed limits.

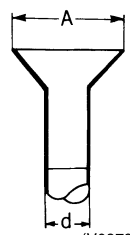

(V0979)

Nominal diameter	External diamenter of pipe d	Pipe widening dimensions A
3/8B	9.53	12.2~12.8
1/2B	12.7	15.6~16.2
5/8B	15.88	18.8~19.4
3/4B	19.05	23.1~23.7

(d) Coat the inner and outer surface of the flare with refrigerator oil (Ester or ether oil). (this ensures that the flare nut passes smoothly, preventing the pipe from twisting.)
Do not use SUNISO-4GS oil.

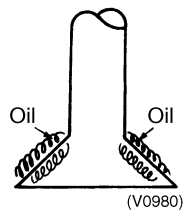

(V0980)

Important points

1. Burrs should be carefully removed.
2. 2 spanners should be used to grip the pipe.
3. The flare nut must be inserted before starting the flaring operation.
4. The appropriate amount of torque should be used to tighten the flare nut.

Standard torques for tightening flare nut ±10%

Size	Torque	
	(kgf-cm)	(N-cm)
1/4(6.4ϕ)	144~176	1420~1720
3/8(9.5ϕ)	333~407	3270~3990
1/2(12.7ϕ)	504~616	4950~6030
5/8(15.9ϕ)	630~770	6180~7540
3/4(19.1ϕ)	990~1210	9270~11860

5. Check that there is no superficial damage to the surface of the flare.

Все каталоги и инструкции здесь: https://splitsystema48.ru/instrukcii-po-ekspluatacii-kondicionerov.html

Si33-102.book Page 23 Tuesday, June 26, 2001 3:18 PM

Flaring Procedure

① Cut the pipe using a pipe cutter.

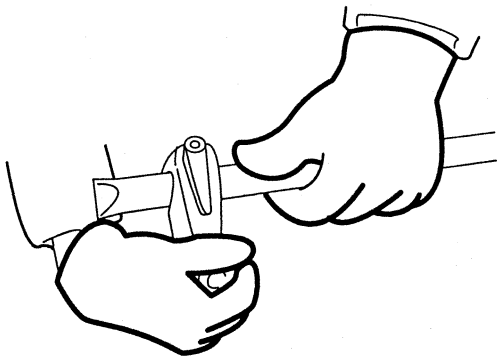

② The cut edge has burrs.
(The amount of burrs becomes larger when the pipe wall is thick.)

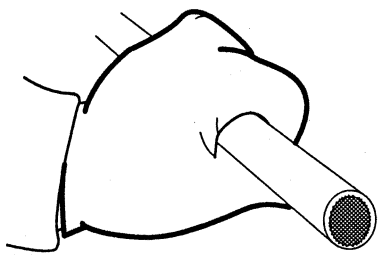

③ Remove the burrs using a file.
(Be careful not to let particles enter the pipe. Point the pipe end downward during filing.)

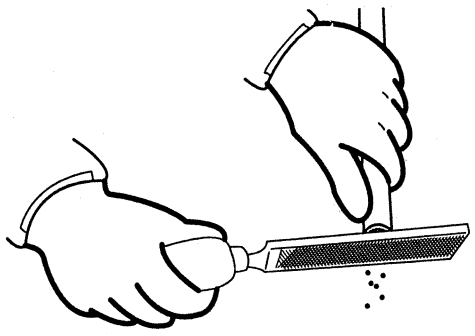

④ Remove the burrs using a knife
(Be fareful not to let particles enter the pipe. Point the pipe end downward during cutting.)

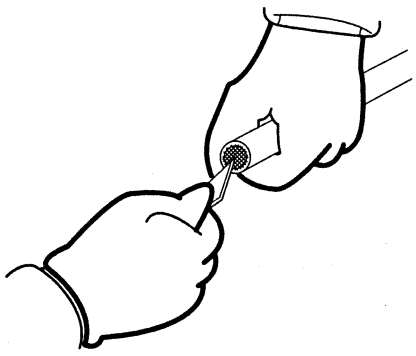

⑤ Clean the inside of the pipe.
(Use a thin stick with a cloth wrapped around it.)

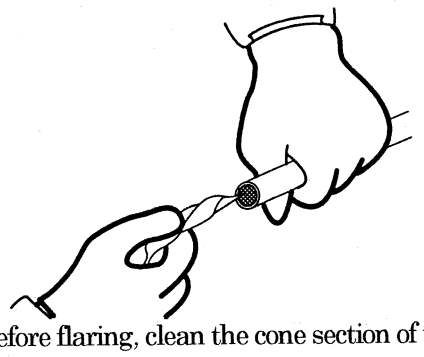

⑥ Before flaring, clean the cone section of the flaring tool.

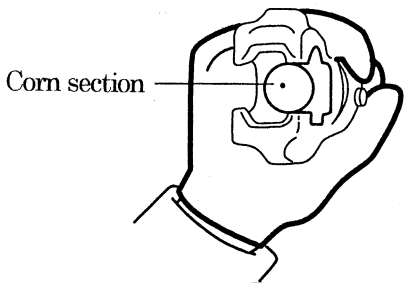

⑦ Flare the pipe.
Rotate the flaring tool 3 or 4 turns after a clicking sound is produced. This results in a clean flared surface.

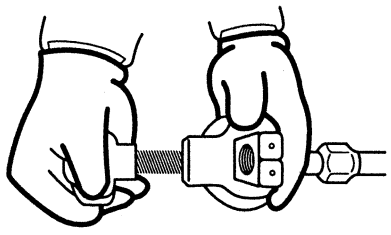

⑧ Apply refrigerant oil (SUNISO oil) on the inside and outside of the flared section.
(Be careful to keep dust away.)

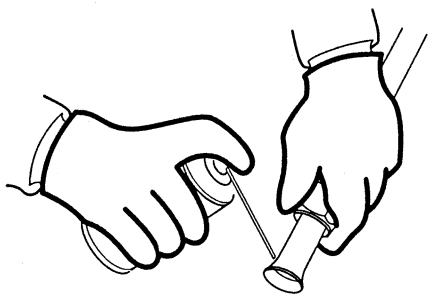

(V1663)

Все каталоги и инструкции здесь: https://splitsystema48.ru/instrukcii-po-ekspluatacii-kondicionerov.html

Si33-102.book Page 24 Tuesday, June 26, 2001 3:18 PM

⑨ Tighten the flare nut.
(Use a torque wrench to apply the proper tightening force.)

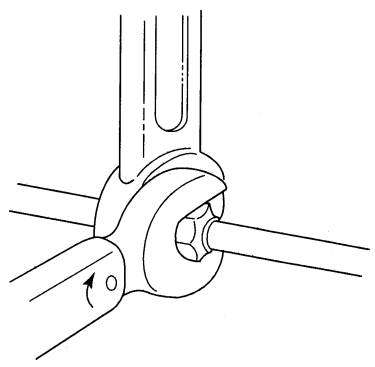

⑩ Check for gas leaks.
(Check at the threaded section of the flare nut for gas leaks.)
Spray-type gas leak detecting products are available on the market. Soap water may be used to check for leaks, but use only neutral soap to prevent corrosion of the flare nut.
Be sure to wipe the nut area clean after the gas leak check.

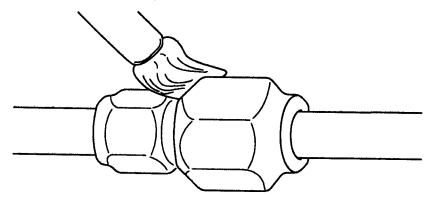

Tighten the flare nut with proper torque.
It takes a lot of experience to tighten the flare nut properly without the use of a torque wrench.

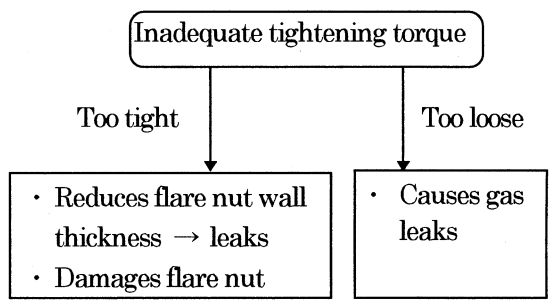

(V0984)

Not recommendable but in case of emergency

You must use a torque wrench but if you are obliged to install the unit without a torque wrench, you may follow the installation method mentioned below.

After the work is finished, make sure to check that is no gas leak.

When you keep on tightening the flare nut with a spanner, there is a point where the tightening torque suddenly increases. From that position, further tighten the flare nut the angle shown below:

Pipe size	Further tightening angle	Recommended arm length of tool
6.4 (1/4”)	60 to 90 degrees	Approx. 150mm
9.5 (3/8”)	60 to 90 degrees	Approx. 200mm
12.7 (1/2”)	30 to 60 degrees	Approx. 250mm
15.9 (5/8”)	30 to 60 degrees	Approx. 300mm
19.1 (3/4”)	20 to 35 degrees	Approx. 450mm

Все каталоги и инструкции здесь: https://splitsystema48.ru/instrukcii-po-ekspluatacii-kondicionerov.html

Si33-102.book Page 25 Tuesday, June 26, 2001 3:18 PM

Flange Connection

a) The flange sheet surface should be clean and undamaged. (Clean any dirt away with a cloth and check that there has been no damage.)
b) Coat the flange sheet surface with refrigeration oil (Ester or ether oil) and then insert the packing. (Do not use SUNISO oil.)

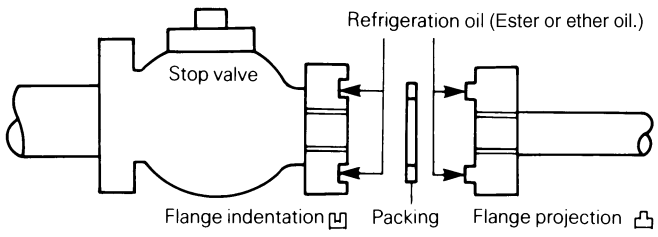

c) Tighten the bolts in opposite corners first to ensure that the connection is true.

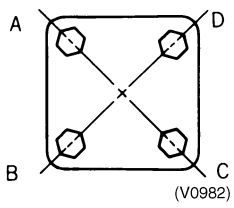

[Example]
Order:A→C→B→D

The bolts should be tightened little by little in the above order such that the same degree of torque is applied evenly to each corner.

Important points

1. Only clean refrigeration/oil should be used to coat the flange. (i.e. free from dirt or water)
2. The correct amount of torque should be applied when tightening the flange bolts.

Standard torques for tightening screws and bolts

ISO hexagonal bolt

Class	5.8(5T)		10.9(10T)	
Size	kgf-cm ±15%	N-m ±15%	kgf-cm ±15%	N-m ±15%
M8	125	1230	302	2960
M10	257	2520	620	6080
M12	436	4280	1,050	10,300
M16	1,030	10,100	2,480	24,300
M20	2,050	20,100	4,950	48,500

Все каталоги и инструкции здесь: https://splitsystema48.ru/instrukcii-po-ekspluatacii-kondicionerov.html

Si33-102.book Page 26 Tuesday, June 26, 2001 3:18 PM

3.2.4 Thermal Insulation Work (Refrigerant Piping)

■ **Operational steps**

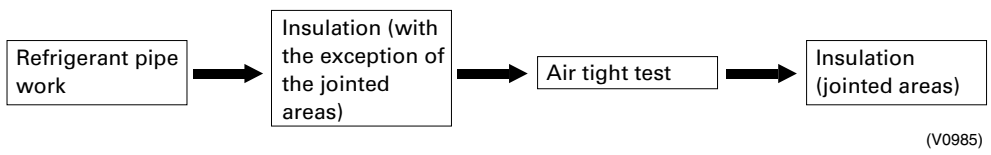

Materials

The thermal insulation materials which are used must be well able to withstand the heat from the pipes.
Example:
Heat pump type: Heat resistant polyethylene foam (heat resistance of at least 120˚C)
Cooling only: Polyethylene foam (heat resistance of 100˚C or more)

Essential Points of Thermal Insulation

The insulation of jointed areas such as the soldered, flared or flanged sections should only be carried out after the successful completion of the air tight test.
Attention should be paid to the unit model and its operating conditions since there are occasions when the gas and liquid pipes also need to be thermally insulated.

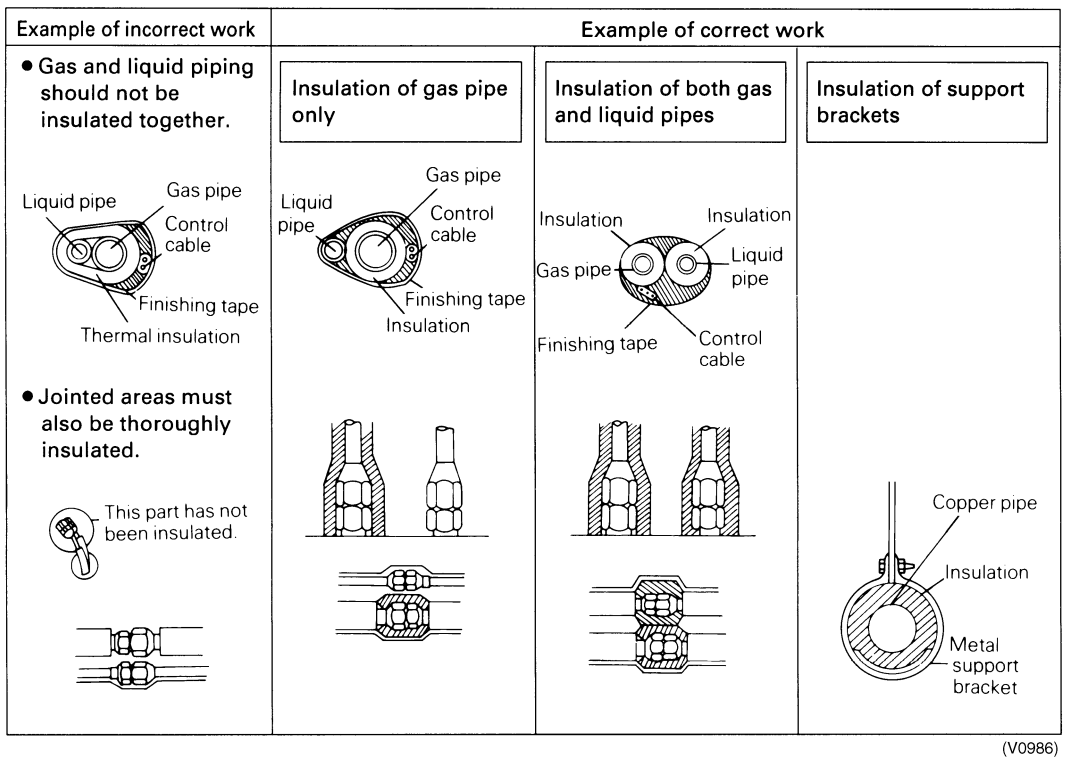

■ **Important points**

1. The thickness of the thermal insulation material must be determined in the light of the pipe sizes.

Pipe size	Thickness of insulation material
6.4mm~25.4mm	10mm or more
28.6mm~38.1mm	15mm or more

2. It will be necessary to increase the values in the above table for top floors or where conditions are hot and humid.
3. Where a customer supplies his own specifications then these must be adhered to.
4. Where it is anticipated that the air conditioning unit will be operated at external air temperatures of 10˚C or less then thermal insulation will also be required for the liquid pipes.

Все каталоги и инструкции здесь: https://splitsystema48.ru/instrukcii-po-ekspluatacii-kondicionerov.html

Si33-102.book Page 27 Tuesday, June 26, 2001 3:18 PM

3.2.5 Air Tight Test

■ **Operational steps**

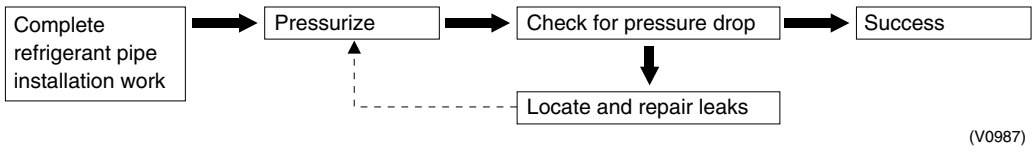

Essential Points of Testing (Maintaining Pressure Over a Period)

The key to successful testing is strict adherence to the following procedure:

a) The liquid and gas piping in each refrigerant system should be pressurized in turn in accordance with the following steps. (Nitrogen gas must be used.)

- **Step 1: increase pressure to 0.3MPa for 3 minutes or more**
- **Step 2: increase pressure to 1.5MPa for 3 minutes or more**

} Indicates existence of major leaks

- **Step 3: increase pressure to 2.8MPa for approx. 24 hours**

} Indicates existence of minor leaks

∗Increasing the system pressure to 3.20MPa does not guarantee the identification of minor leaks if pressure is maintained for only a short time. It is therefore recommended that the system remain pressurized in accordance with Step 3 above for at least 24 hours.

Note: The pressure must on no account be increased beyond 2.8MPa.

b) Check for pressure drop
If there is no drop in pressure then the test is deemed a success.
If the pressure drops then the leak must be located. See following page.
However, if there is a change in the ambient temperature between the pressurizing stage and the time when you check for a drop in pressure then you will have to adjust your calculations accordingly since a change of 1˚C can account for a pressure change of approximately 0.01MPa.
Compensating adjustment value:
(temperature at time of pressurizing – temperature at time of checking) × 0.1
Example:
Time of pressurizing: 2.8MPa 25˚C
24 hours later: 2.75MPa 20˚C
The pressure drop in such a case is deemed to be zero (successful test).

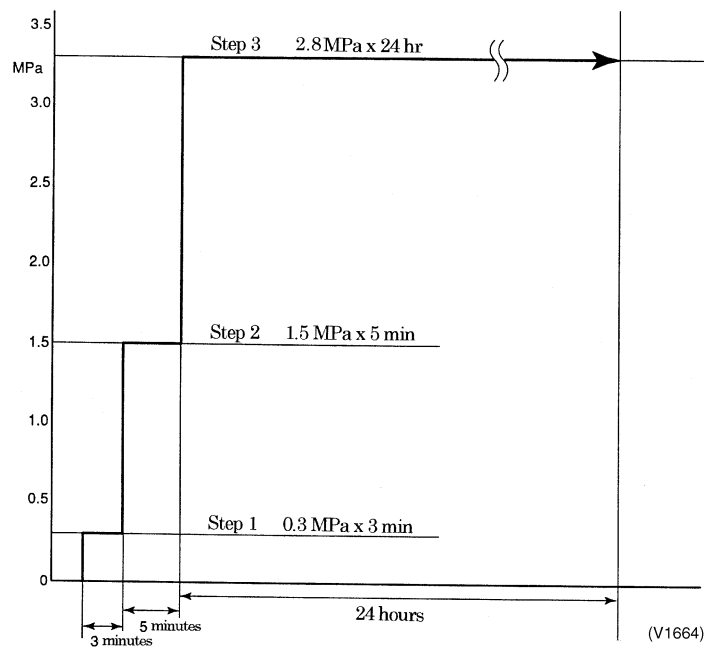

Все каталоги и инструкции здесь: https://splitsystema48.ru/instrukcii-po-ekspluatacii-kondicionerov.html

Si33-102.book Page 28 Tuesday, June 26, 2001 3:18 PM

Checking for Leaks

[Check 1] (Where pressure falls while carrying out Steps 1 to 3 described on previous page)

- Check by ear.....Listen for the sound of a major leak.
- Check by hand.....Check for leak by feeling around jointed sections with hand.
- Soap and water check (∗Snoop).....Bubbles will reveal the presence of a leak.

[Check 2] (When searching for a minor leak or when there has been a fall in pressure while the system has been fully pressurized but the source of the leak cannot be traced.)

1. Release the nitrogen until the pressure reaches 0.3MPa.
2. Increase pressure to 1.5MPa using gaseous flon gas (R-22). (Nitrogen and refrigerant gas mixed)
3. Search for the source of the leak using a detector such as a halide torch or a propane or electric detector.
4. If the source of the leak still cannot be traced then repressurize with nitrogen up to 2.8MPa and check again. (The pressure must not be increased to more than 2.8MPa.)

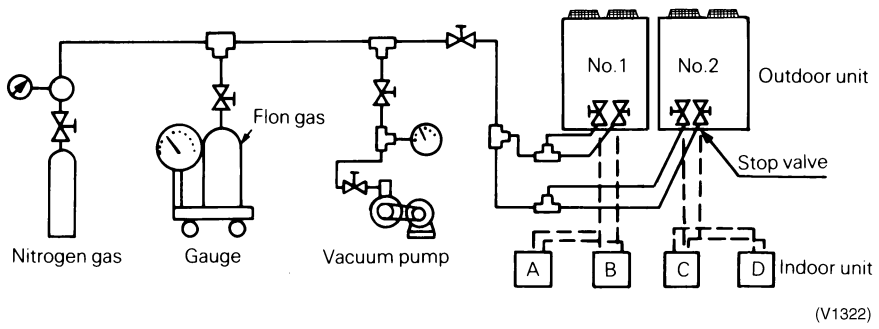

Important points

1. Where the lengths of piping involved are particularly long then the air tight test should be carried out block by block.

Example:

1. Indoor side
2. Indoor side + vertical pipes
3. Indoor side + vertical pipes + outdoor side

Все каталоги и инструкции здесь: https://splitsystema48.ru/instrukcii-po-ekspluatacii-kondicionerov.html

Si33-102.book Page 29 Tuesday, June 26, 2001 3:18 PM

3.2.6 Vacuum Drying

What is vacuum drying?

Vacuum drying is:
"The use of a vacuum pump to vaporize (gasify) the moisture (liquid) inside the pipes and expel it leaving the pipes completely dry inside."
At 1 atm (760 mmHg) the boiling point (evaporating temperature) of water is 100˚C but if a vacuum is created inside the pipes using a vacuum pump then the boiling point is rapidly reduced as the degree of the vacuum is increased. If the boiling point is reduced to a level below that of the ambient temperature then the moisture in the pipes will evaporate.

<Example>
When outside temperature is 72˚C
As shown in the table on the right, the degree of vacuum must be lowered below –75.2cmHg. →

Boiling point of water (˚C)	Pressure		
	*cmHg	Pa	Torr
40	–70.5	7333	55
30	–72.4	4800	36
26.7	–73.5	3333	25
24.4	–73.8	3066	22
22.2	–74.0	2666	20
20.6	–74.2	2400	18
17.8	–74.5	2000	15
15.0	–74.7	1733	13
11.7	–75.0	1333	10
7.2	–75.2	1066	8
0	–75.5	667	5

Above figures (cmHg) are gauge pressure readings.

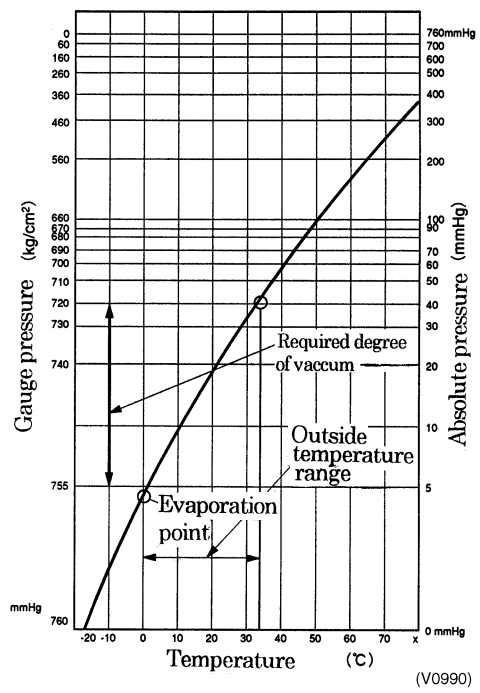

The evacuation of air conditioner piping provides the following effects.
1. Vacuum drying
2. Removes air and nitrogen (used in air-tightness test) from the inside of pipes.

Therfore, it is necessary to ensure that the both purposes have been achieved in the vacuum drying operation.

Key points
Lower the degree of vacuum to below –755mmHg

(V1216)

Все каталоги и инструкции здесь: https://splitsystema48.ru/instrukcii-po-ekspluatacii-kondicionerov.html

Si33-102.book Page 30 Tuesday, June 26, 2001 3:18 PM

Choosing a Vacuum Pump

General

Refrigerant piping content volume of the Plus Series is larger than the VRV Inverter Series, and consequently takes more time for vacuum drying. If you have time to spare, you may use the same vacuum pump, but if you want to save time, you will have to use a pump with higher exhaust velocity (exhaust volume).

1. **Vacuum pump performance**
   The 2 most import things for determining vacuum pump performance are as follows:
   (1) Exhaust velocity
   (2) Degree of vacuum

(1) Exhaust velocity

Exhaust volume is usually expressed as l/min or m^3/h. The larger the number, the faster vacuum id achieved.
Generally speaking, the faster the exhaust velocity, the larger and heavier the vacuum pump itself is. Commercially available vacuum pumps (exhaust velocity of 20 - 30 l/min) usually take an extremely long time to achieve vacuum. (We recommend a vacuum pump of approx. 60 - 100 l/min.)

(2) Degree of vacuum

Ultimate vacuum varies largely according to use of the vacuum pump. Vacuum pumps used for vacuum forming cannot be used for vacuum drying. (A vacuum pump with a high degree of vacuum is required.)

When selecting a vacuum, you should select one which is capable of achieving 0.2 Torr of ultimate vacuum.

Degree of vacuum is expressed in Torr, micron, nnHg, and Pascal (Pa). The units correlate as follows:

	Unit	Standard atmospheric pressure	Perfect vacuum
Gauge Pressure	kg/cm²	0	–1.033
Absolute Pressure	kg/cm² abs	1.033	0
Torr	Torr	760	0
Micron	Micron	760000	0
cmHg	cmHg	0	76
Pa	hPa	1013.33	0

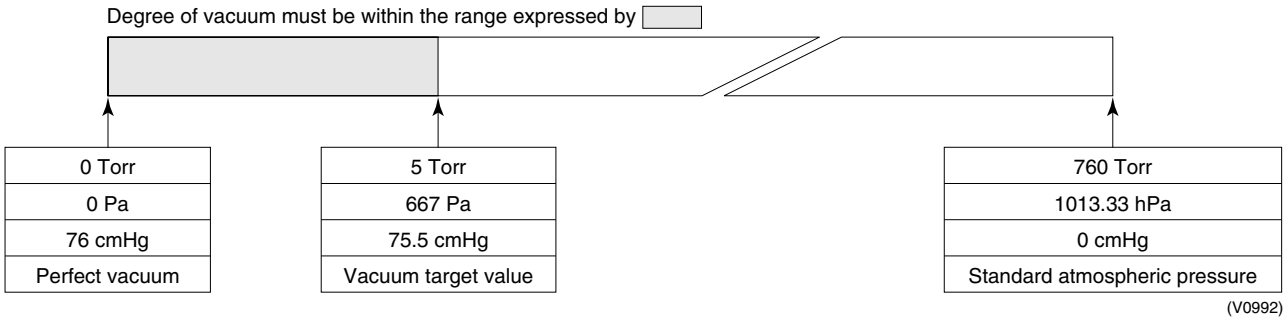

Все каталоги и инструкции здесь: https://splitsystema48.ru/instrukcii-po-ekspluatacii-kondicionerov.html

Si33-102.book Page 31 Tuesday, June 26, 2001 3:18 PM

2. Vacuum pump maintenance

Because of their nature, most vacuum pumps contain large amounts of oil which lubricates bearings, etc., and functions to enhance airtightness of pistons. When using a vacuum pump to discharge air from refrigerant piping, moisture in the air tends to get mixed in with the oil. You must therefore change oil periodically and make sure the proper oil level is maintained. (Perform periodic inspections in accordance with the operating instructions.)

3. Degree of vacuum measurement

An extremely accurate vacuum gauge is required to test degree of vacuum. You cannot accurately measure degree of vacuum with the compound gauge on the gauge manifold. A Pirani vacuum gauge is required to measure degree of vacuum accurately. Because Pirani gauges are very sensitive and require extreme care when using, they are not very suitable for use in the field. You should therefore use the Pirani gauge to calibrate the attached vacuum gauge on the gauge manifold and the degree of vacuum of the vacuum pump.

4. Calibration method

1. Connect a Pirani vacuum gauge and the gauge manifold vacuum gauge (0 - 76 cmHg) to the vacuum pump at the same time, and run the pump for about 3 minutes.
2. Make sure the reading of the Pirani vacuum gauge is 5 Torr (667 Pa) or less. The reading of conventional vacuum pumps lowers to about 0.2 Torr.
   If the reading is not 5 Torr or less, check the vacuum pump oil. (Oil is low in many cases.)
3. Check the attached gauge on the gauge manifold. Adjust the gauge if the reading is not exactly correct.
4. Adjust the gauge manifold valve so that the Pirani vacuum gauge reads 5 Torr.
5. Mark the position indicated by the gauge manifold gauge with an oil based ink pen.
6. Use the mark of the gauge manifold as a target when vacuuming in the field.

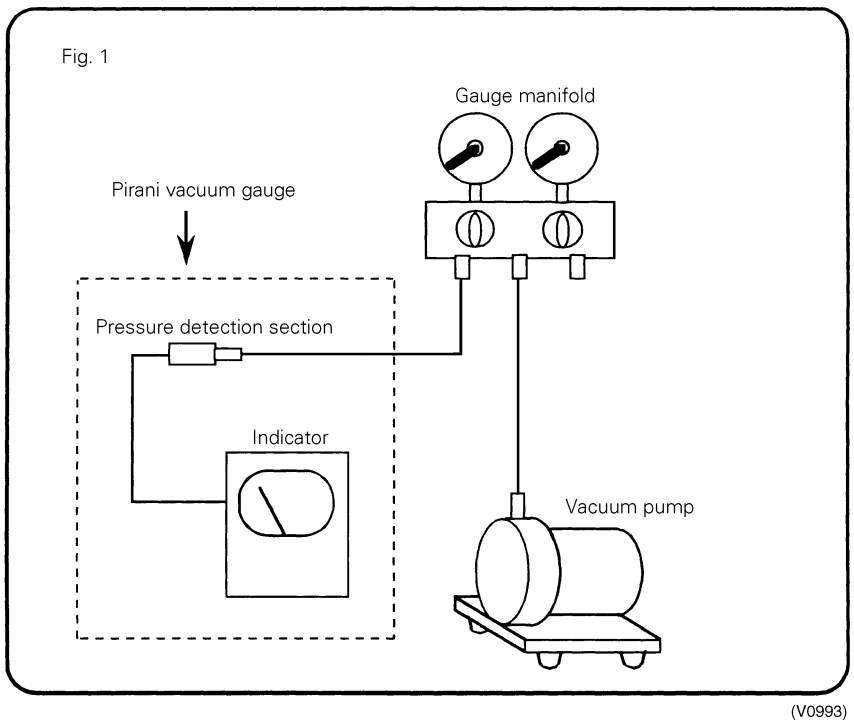

(Reference) Types of vacuum pump with respective maximum degree of vacuum

Type	Maximum Degree of Vacuum / Expulsion Capacity	Use: Vacuum Drying	Use: Air Expulsion
Oil Rotary (Oil Using)	0.02 mmHg / 100 l/min	Suitable	Suitable
Oilless Rotary (No Need of Oil)	10 mmHg / 50 l/min	Unsuitable	Suitable
	0.02 mmHg / 40 l/min	Suitable	Suitable

←Many handy pumps fall into this category

Все каталоги и инструкции здесь: https://splitsystema48.ru/instrukcii-po-ekspluatacii-kondicionerov.html

Si33-102.book Page 32 Tuesday, June 26, 2001 3:18 PM

Vacuum Drying Procedure

There are two vacuum drying methods and the appropriate one should always be chosen to conform with individual local conditions.
[Normal vacuum drying].....The standard method

[Operational steps]

1. Vacuum drying (1st time): Connect a manifold gauge to the service port of the liquid or gas pipe and operate the vacuum pump for at least 2 hours.
   (The degree of vacuum produced should be in excess of 5 mmHg)
   If after 2 hours the vacuum produced has not exceeded 5 mmHg then either there is moisture in the pipe or there is a leak. Operate the vacuum pump for a further hour.
   If, even after 3 hours, the vacuum has not reached 5 mmHg then check the system for a leak.
2. Carry out maintained vacuum test.
   Produce a vacuum in excess of –755 mmHg and do not release it for an hour or more. Check the vacuum gauge to make sure that it has not risen. (If the gauge does rise then there is still moisture in the pipe or there is a leak somewhere.)
3. Additional charge of refrigerant.
   Connect the charging cylinder to the liquid pipe service port and charge with the required amount of refrigerant.
4. Open stop valve to the full.
   Open the stop valves on the liquid and the gas pipes to the full.

Note: Vacuums should be produced in both the liquid and the gas pipes.
(Because there are a large number of functional components in the indoor unit which cut off the vacuum mid–way through)

[Standard vacuum drying time chart]

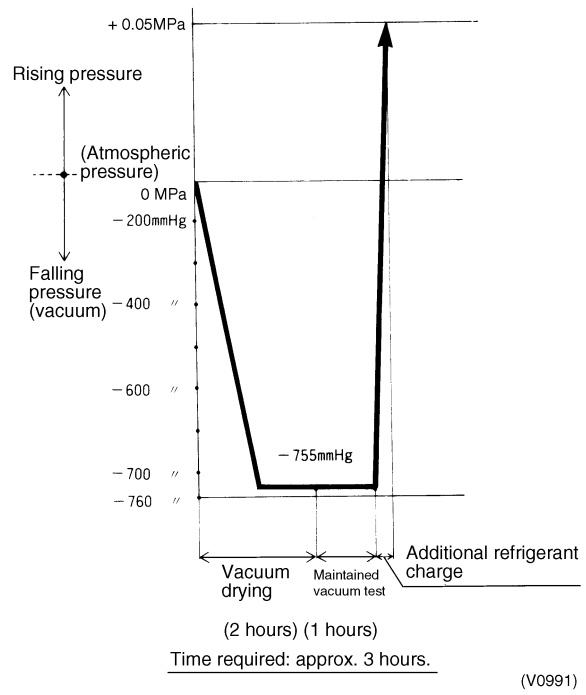

Все каталоги и инструкции здесь: https://splitsystema48.ru/instrukcii-po-ekspluatacii-kondicionerov.html

Si33-102.book Page 33 Tuesday, June 26, 2001 3:18 PM

Special vacuum drying

This vacuum drying method is selected when there is a suspicion that there may be moisture in the pipes. For example:

- When moisture was discovered during the refrigerant pipe flushing operation
- When there is a risk of condensation forming inside the pipes during periods of heavy rainfall
- When there is a risk of condensation forming inside the pipes due to a long term of works
- When there is a risk that rainwater may have entered the pipes during installation

The special vacuum drying method is the same as the standard method except that nitrogen is introduced into the pipes to break the vacuum on one or more occasions during the course of the operation.

[Operational steps]

1. Vacuum drying (1st time): 2 hours
2. Vacuum breaking (1st time): Use nitrogen to raise pressure to +0.05MPa.
   (Since the nitrogen gas used to break the vacuum is dry nitrogen this process serves only to enhance the overall drying effect of the vacuum drying operation itself.
   However, since the effectiveness of this process is severely impaired by a high moisture level inside the pipes, the utmost care is required during installation to see that water does not enter or form inside the refrigerant pipes.)
3. Vacuum drying (2nd time): Operate the vacuum pump for at least 1 hour.
   (Observations: Degree of vacuum has reached 5 mmHg. If the degree of vacuum has not reached 5 mmHg after 2 hours or more then repeat the operations at 2 (vacuum breaking) and 3 (vacuum drying) above.)
4. Carry out maintained vacuum test: 1 hour
5. Additional charge of refrigerant
6. Open stop valve to the full

* The gas used for the vacuum breaking operation must be nitrogen.
(The use of oxygen brings a serious risk of explosions)

[Special vacuum drying time chart]

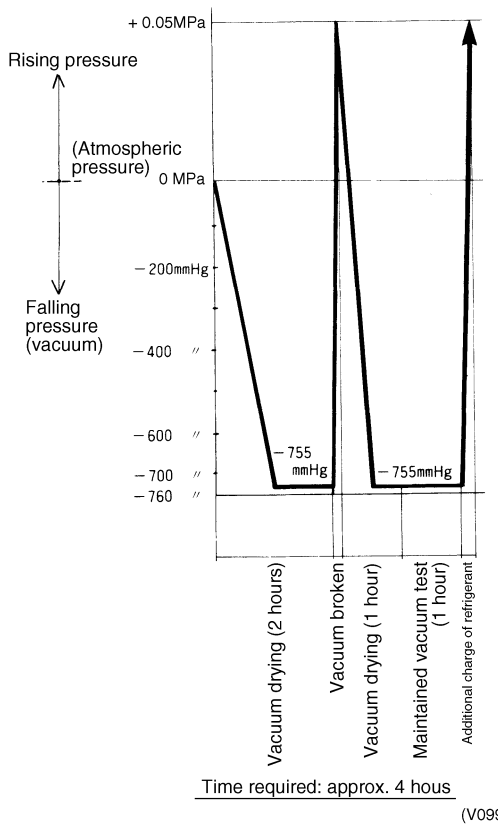

Все каталоги и инструкции здесь: https://splitsystema48.ru/instrukcii-po-ekspluatacii-kondicionerov.html

Si33-102.book Page 34 Tuesday, June 26, 2001 3:18 PM

3.2.7 Additional Charge of Refrigerant

■ **Operational steps**

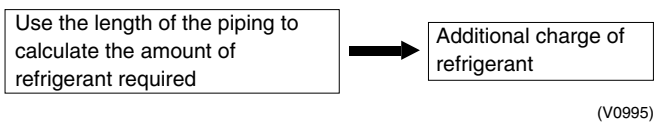

Important points

1. The results of all calculations must be recorded. (Make a list.)
2. The refrigerant will need to be additionally charged whenever the distance between the outdoor unit and the most distant indoor unit is more than 10m.
3. The additional charging operation should be carried out by input of liquid into the liquid pipes from a charging cylinder following completion of the vacuum drying operation.
4. When the additional charging operation cannot be satisfactorily completed use the action of the compressor to complete the additional charging during the test run.

3.2.8 Drain Pipe Work (Indoor)

■ **Operational steps**

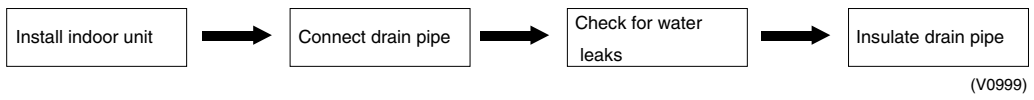

Drain Pipe Gradient and Support

a) The drain pipe must be fitted at a gradient of at least 1/100.
The drain pipe should be as short as possible and free from airlocks.

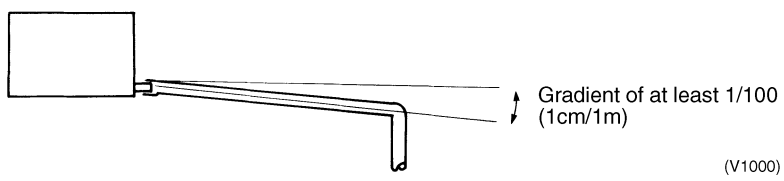

b) Suspension bolts should be used to support long stretches of drain pipe in order to ensure that a gradient of 1/100 is maintained. (PVC pipes should not be bent)

Spacing of supports for horizontal piping

Class	Nominal diameter	Spacing
Rigid PVC pipe	25~40mm	1~1.5m

c) The lenght of pipe laid horizontally should be kept to a minimum.

Все каталоги и инструкции здесь: https://splitsystema48.ru/instrukcii-po-ekspluatacii-kondicionerov.html

Si33-102.book Page 35 Tuesday, June 26, 2001 3:18 PM

Drain Trap

Fit any indoor unit whose drain pipe connection is subjected to negative pressure, with a drain trap. (FXYM40~125 only)

a) Rig the drain trap as shown in the drawing bellow.

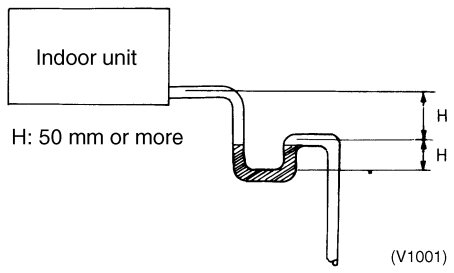

b) Provide one trap per unit. A single trap for converging units will prove ineffective.

c) Rig the trap to allow for future cleaning.

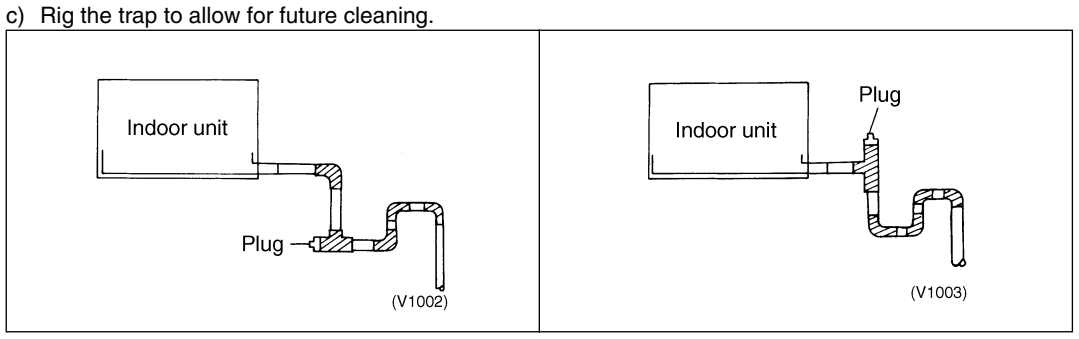

Grouped Drain Piping

1. It is standard work practice to make connections to the main pipe from above. The pipe down from the combination should be as large as possible.

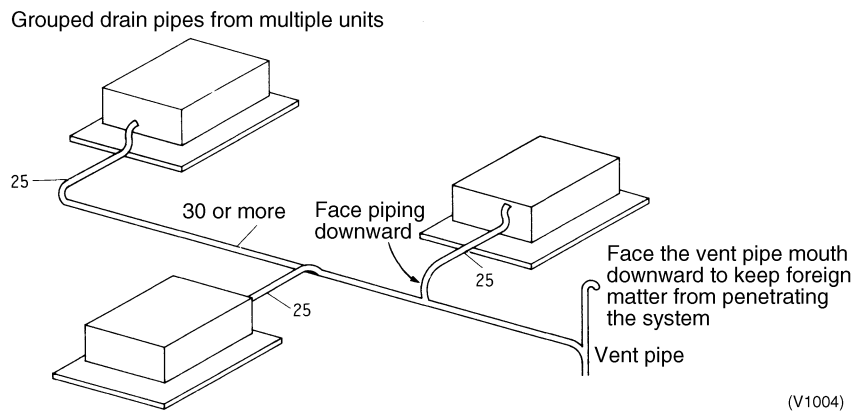

2. The pipework should be kept as short as possible and the number of indoor units per group kept to a minimum.

Все каталоги и инструкции здесь: https://splitsystema48.ru/instrukcii-po-ekspluatacii-kondicionerov.html

Si33-102.book Page 36 Tuesday, June 26, 2001 3:18 PM

Use of an Auxiliary Drain Hose (Flexible)

If a drain pan made of polystyrene foam is used then an auxiliary drain hose (flexible) is also essential. A flexible drain hose permits the drain socket and drain pipe to be connected without difficulty and prevents any undue strain being placed on the drain pan.

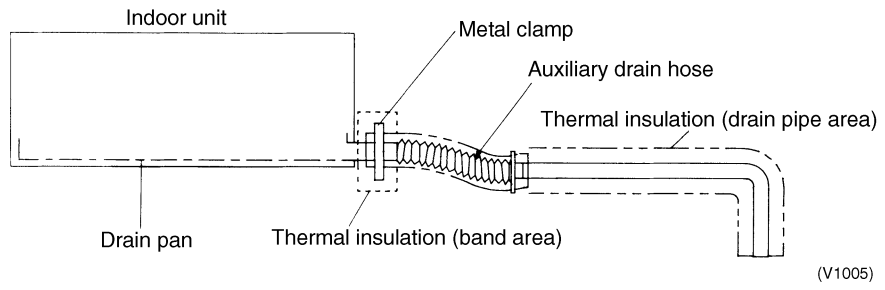

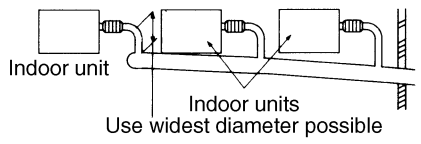

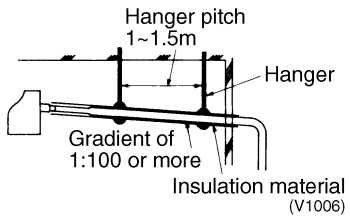

Important points

1. The drain pipe should be at least equal in size to that of the indoor unit.
2. The drain pipe is thermally insulated to prevent the formation of condensation inside the pipe.
3. The drain up mechanism should be fitted before the indoor unit is installed and when the electricity has been connected some water should be added to the drain pan and the drain pump checked to see that it is functioning correctly.
4. All connections should be secure. (Special care is needed with PVC pipe)
   The use of a colored adhesive with PVC pipes will help you to remember to connect them up.)

Все каталоги и инструкции здесь: https://splitsystema48.ru/instrukcii-po-ekspluatacii-kondicionerov.html

Si33-102.book Page 37 Tuesday, June 26, 2001 3:18 PM

Piping Diameter for Grouped Drain Pipes

- Select piping diameter from the below table in accordance with the amount of condensation drained by all units with a common drain pipe.
- Consider 2 l/hr of drainage for every 1 HP. For example, drainage from 3 units running at 2 HP and 2 units running at 3 HP is calculated as follows.
  2 (l/hr) × 2 (HP) × 3 (units) + 2 (l/hr) × 3 (HP) × 2 (units) = 24 l/hr

1. Relationship between horizontal pipe diameter and allowable drainage (for extended ventilation system)

JIS nominal	Vinyl chloride pipe diameter (mm)	Allowable flow rate (l/hr)		Remarks
		Piping gradient 1:50	Piping gradient 1:100	
VP20	20	39	27	(Reference value) Cannot be used in grouped piping.
VP25	25	70	50	
VP30	31	125	88	Can be used in grouped piping.
VP40	40	247	175	
VP50	51	473	334	

Notes:
- Calculations have been made with water area inside the pipe as 10%.
- Allowable flow rate figures below the decimal have been discarded.
- Use VP30 or larger pipe after the convergence point.

2. Relationship between riser diameter and allowable drainage (for extended ventilation system)

JIS nominal	Vinyl chloride pipe diameter (mm)	Allowable flow rate (l/hr)	Remarks
VP20	20	220	(Reference value) Cannot be used in grouped piping.
VP25	25	410	
VP30	31	730	Can be used in grouped piping.
VP40	40	1440	
VP50	51	2760	
VP65	67	5710	
VP75	77	8280	

Notes:
- Allowed flow rate figures below the decimal have been discarded.
- Use VP30 or larger pipe in risers.
- Use the same drain pipe for the humidifier as the indoor unit.

3.2.9 Drain Piping for Each Model

FXYC-2-way blow ceiling mounted cassette

1. Rig drain piping
- The diameter of the drain pipe should be greater than or equal to the diameter of the connecting pipe (vinyl tube; pipe size: 25mm; outer dimension: 32mm).
- Keep the drain pipe short and sloping downwards at a gradient of at least 1/100 to prevent air pockets from forming.
- If the drain hose cannot be sufficiently set on a slope, execute the drain raising piping.
- To keep the drain hose from sagging, space hanging wires every 1 to 1.5 m.

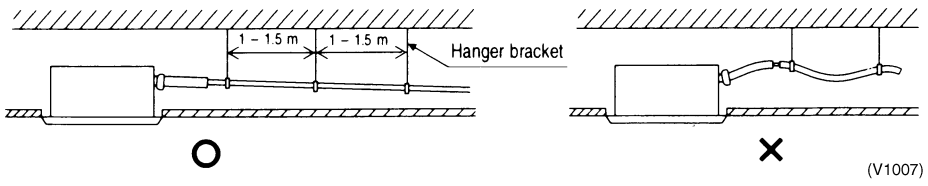

- Use the attached drain hose and clamp metal.
  Insert the drain hose into the drain socket, up to the white tape. Tighten the clamp until the screw head is less than 4 mm from the hose.
- Wrap the attached sealing pad over the clamp and drain hose to insulate.

Все каталоги и инструкции здесь: https://splitsystema48.ru/instrukcii-po-ekspluatacii-kondicionerov.html

Si33-102.book Page 38 Tuesday, June 26, 2001 3:18 PM

■ Insulate the drain hose inside the building.

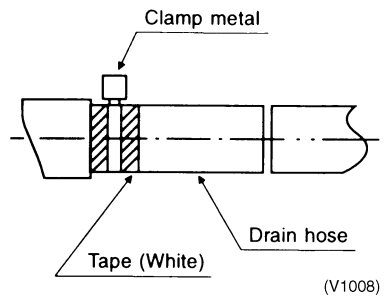

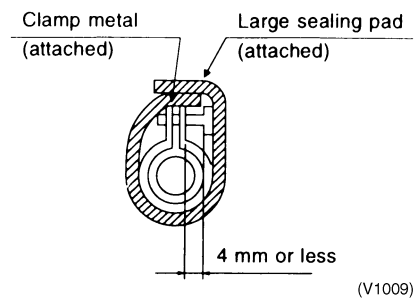

(PRECAUTIONS FOR DRAIN RAISING PIPING)

■ Install the drain raising pipes at a height of less than 310 mm.

■ Install the drain raising pipes at a right angle to the indoor unit and no more than 300 mm from the unit.

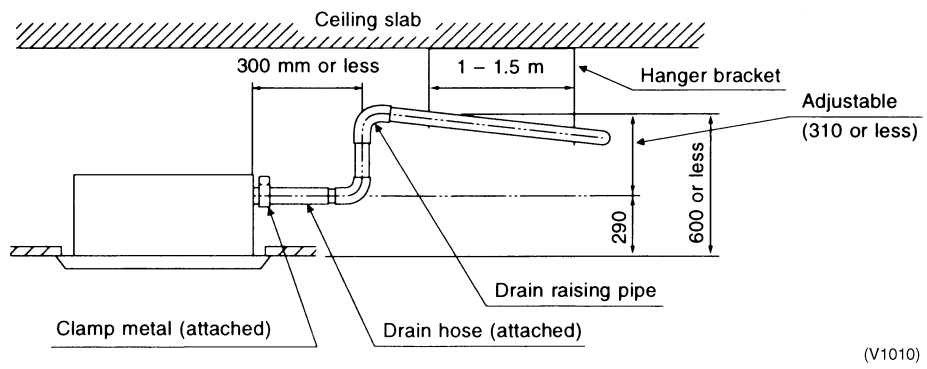

■ If converging multiple drain pipes, install according to the procedure shown below.

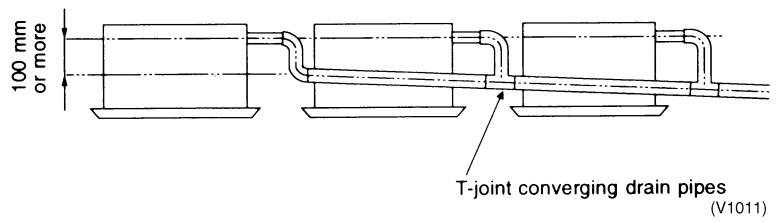

Select converging drain pipes whose gauge is suitable for the operating capacity of the unit.

2. After piping work is finished, check drainage flows smoothly.

■ Open the water inlet lid, add approximately 2500 cc of water gradually and check drainage flow.

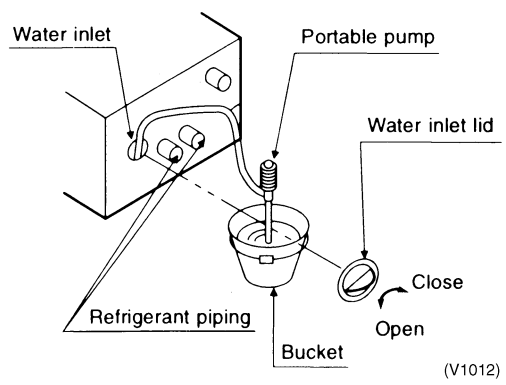

WHEN ELECTRIC WIRING WORK IS FINISHED

■ Check drainage flow during COOL running, explained under “TEST OPERATION”

Все каталоги и инструкции здесь: https://splitsystema48.ru/instrukcii-po-ekspluatacii-kondicionerov.html

Si33-102.book Page 39 Tuesday, June 26, 2001 3:18 PM

WHEN ELECTRIC WIRING WORK IS NOT FINISHED

- Remove the electric parts box lid, connect a power supply and remote control to the terminals. Next, press the inspection/test operation button " TEST " on the remote control. The unit will engage the test operation mode. Press the operation mode selector button " " until selecting FAN OPERATION " ". Then, press the ON/OFF button " ". The indoor unit fan and drain pump will start up. Check that the water has drained from the unit. Press " TEST " to go back to the first mode.
- You can check whether drainage is satisfactory or not by removing the access opening lid and checking the water level of the drain pan through the access opening.
- **Be careful when doing so because the fan is turning at the same time.**

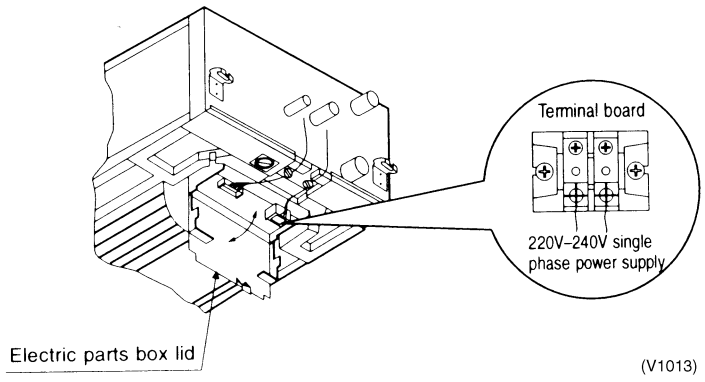

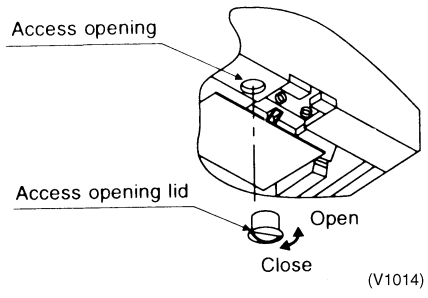

FXYF-4-way blow ceiling mounted cassette

1. Rig drain piping

- The diameter of the drain pipe should be greater than or equal to the diameter of the connecting pipe (vinyl tube; pipe size: 25mm; outer dimension: 32mm).
- Keep the drain pipe short and sloping downwards at a gradient of at least 1/100 to prevent air pockets from forming.
- If the drain hose cannot be sufficiently set on a slope, execute the drain raising piping.
- To keep the drain hose from sagging, space hanging wires every 1 to 1.5 m.

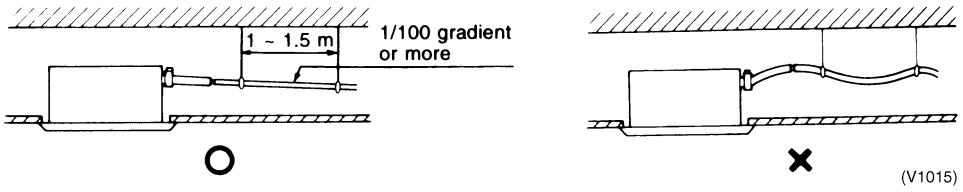

Все каталоги и инструкции здесь: https://splitsystema48.ru/instrukcii-po-ekspluatacii-kondicionerov.html

Si33-102.book Page 40 Tuesday, June 26, 2001 3:18 PM

- Use the attached drain hose ① and clamp metal ②.
  Insert the drain hose into the drain socket, up to the white tape. Tighten the clamp until the screw head is less than 4 mm from the hose.
- Wrap the attached sealing pad over the clamp and drain hose to insulate.
- **Be sure to insulate the 2 below indicated spots.**
  If uninsulated, there is always the possibility of condensation forming and leaking.
  - **The drain piping inside the building**
  - **Drain socket**
- Insulate the drain hose inside the building.

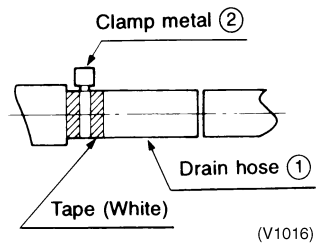

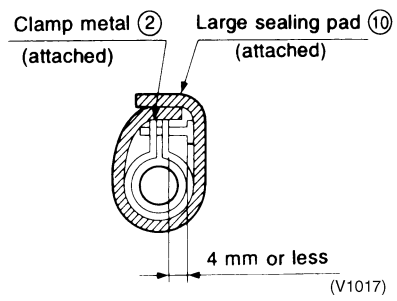

(PRECAUTIONS FOR DRAIN RAISING PIPING)

- Install the drain raising pipes at a height of less than 550 mm.
- Install the drain raising pipes at a right angle to the indoor unit and no more than 300 mm from the unit.

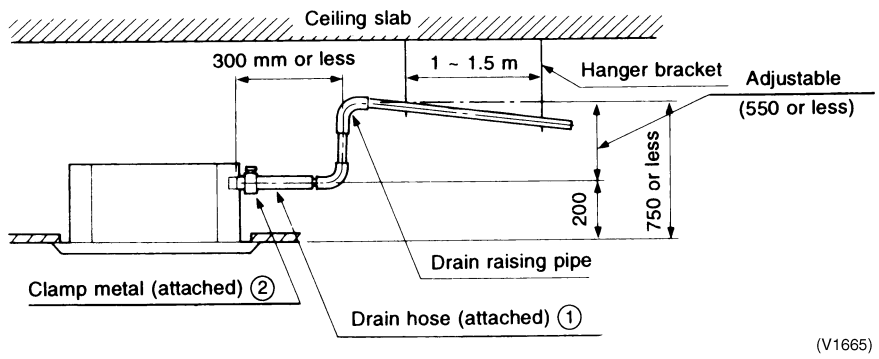

Note:

- The incline of attached drain hose ① should be 75 mm or less so that the drain socket dose not have to stand additional force.

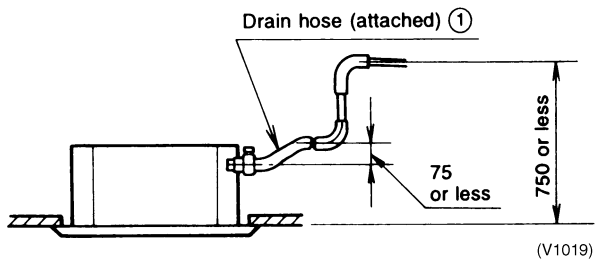

- If converging multiple drain pipes, install according to the procedure shown below.

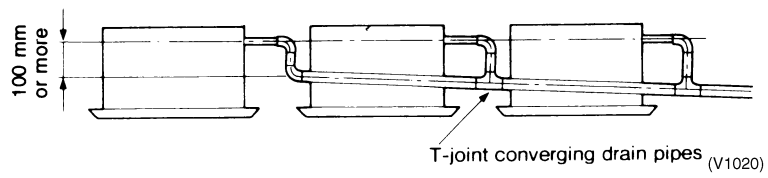

Select converging drain pipes whose gauge is suitable for the operating capacity of the unit.

2. After piping work is finished, check drainage flows smoothly.

- Open the water inlet lid, add approximately 600 cc of water slowly and check drainage flow.

Все каталоги и инструкции здесь: https://splitsystema48.ru/instrukcii-po-ekspluatacii-kondicionerov.html

Si33-102.book Page 41 Tuesday, June 26, 2001 3:18 PM

WHEN ELECTRIC WIRING WORK IS FINISHED

Check drainage flow during COOL running, explained under “TEST OPERATION”.

WHEN ELECTRIC WIRING WORK IS NOT FINISHED

Remove the electric parts box lid, connect a power supply and remote control to the terminals.
Next, press the inspection/test operation button “ TEST ” on the remote control. The unit will engage the test operation mode. Press the operation mode selector button “ ” until selecting FAN OPERATION “ ”. Then, press the ON/OFF button “ ”. The indoor unit fan and drain pump will start up. Check that the water has drained from the unit. Press “ TEST ” to go back to the first mode.

■ Note that the fan also starts rotating.

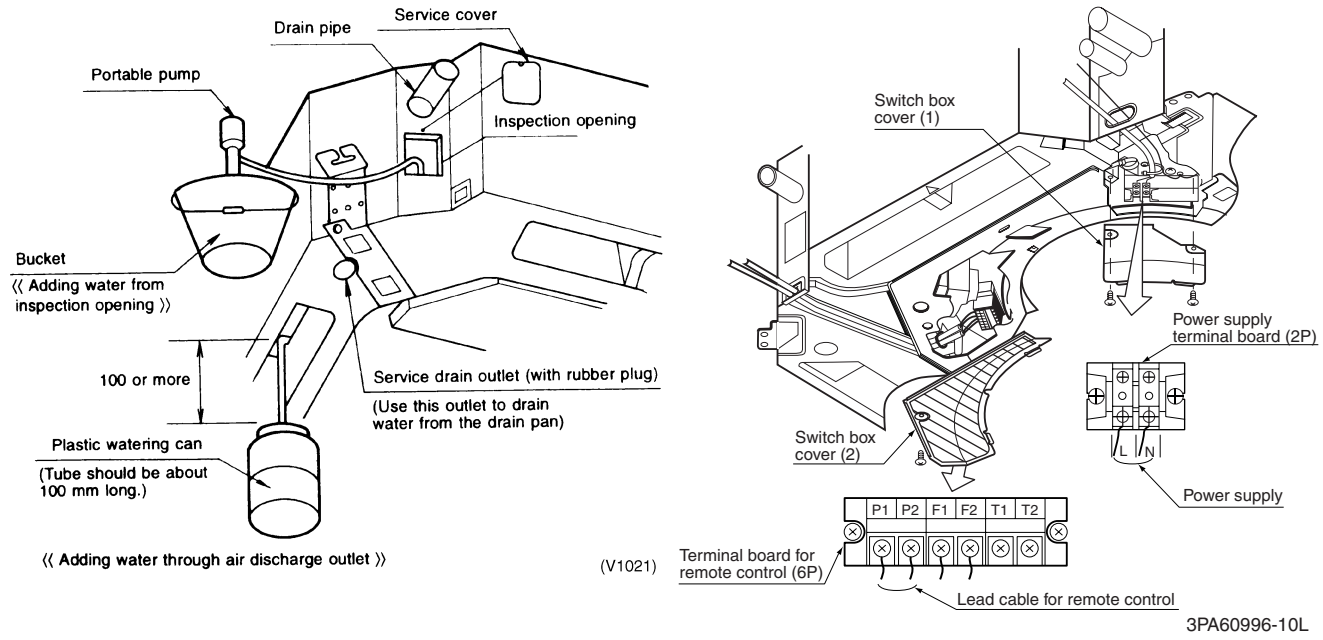

[Method of adding water]

FXYK-ceiling mounted corner cassette

1. Install the drain pipes.

■ Keep piping as short as possible and slope it downwards so that air may not remained trapped inside the pipe.

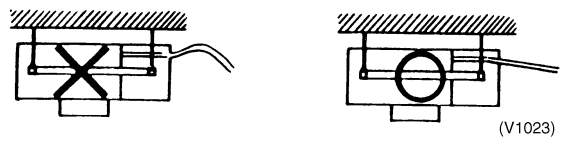

■ Keep pie size equal to or greater than that of the connecting pipe (Vinyl pipe of 25 mm nominal diam. and 32 mm outer diam.).
■ Use the attached drain hose and clamp. Tighten the clamp firmly.
■ Insulate the clamp with the attached sealing pad.
■ Insulate the drain hose inside the building.

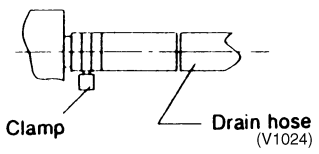

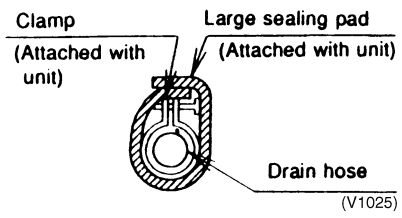

Все каталоги и инструкции здесь: https://splitsystema48.ru/instrukcii-po-ekspluatacii-kondicionerov.html

Si33-102.book Page 42 Tuesday, June 26, 2001 3:18 PM

- If the drain hose cannot be sufficiently set on a slope, fit the hose with drain raising piping as shown in the drawing.
  Be sur to use the attached drain hose, drain raising pipe, clamp and drain pipe insulation
- Secure a downward gradient of 1/100 or more for the drain pipe. To accomplish this, mount supporting brackets at an interval of 1 - 1.5 m.

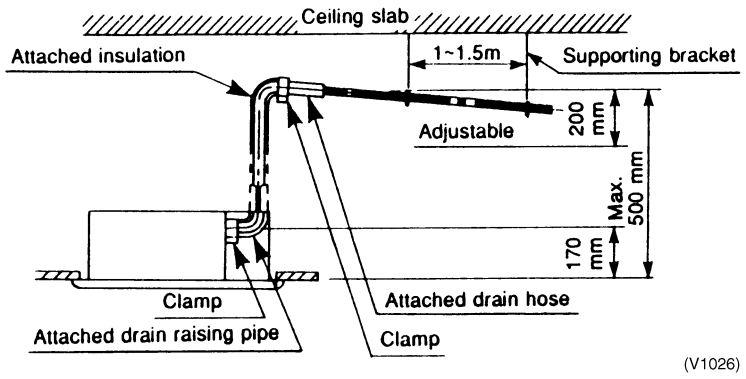

- Use the following outline if laying central drain piping.

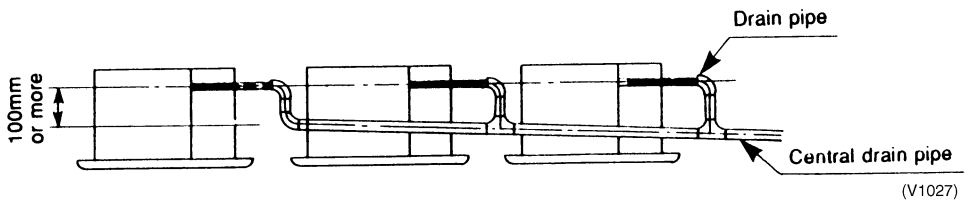

(Drain raising pipe laying procedure)
(1) Connect the drain raising pipe and drain hose and fasten with a clamp.
(2) Mount the drain pipe insulation and wrap with vinyl tape.
(3) After completing steps (1) and (2), attach the drain raising pipe to the drain pipe connection port of the indoor unit and fasten with a clamp. (Do not connect any other pipes between the drain raising pipe and the indoor unit.)

- Adjust the drain raising height by turning the drain raising pipe as shown in the figure.

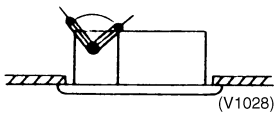

2. After piping, check to make sure draining flows smoothly.

If construction work for interconnecting piping is complete:
Using a plastic container for water filling, etc., gradually inject about 1,000 cc of water into the drain pan through the inspection hatch.

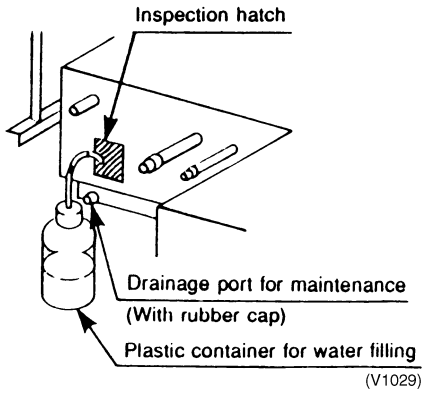

Note: To drain water from the drain pan, use the drainage port for maintenance.

Все каталоги и инструкции здесь: https://splitsystema48.ru/instrukcii-po-ekspluatacii-kondicionerov.html

Si33-102.book Page 43 Tuesday, June 26, 2001 3:18 PM

WHEN ELECTRIC WIRING WORK IS FINISHED

Check drainage flow during COOL running, explained under “TEST OPERATION”.

WHEN ELECTRIC WIRING WORK IS NOT FINISHED

Remove the electric parts box lid, connect a power supply and remote control to the terminals.
Next, press the inspection/test operation button “ TEST ” on the remote control. The unit will engage the test operation mode. Press the operation mode selector button “ ” until selecting FAN OPERATION “ ”. Then, press the ON/OFF button “ ”. The indoor unit fan and drain pump will start up. Check that the water has drained from the unit. Press “ TEST ” to go back to the first mode.

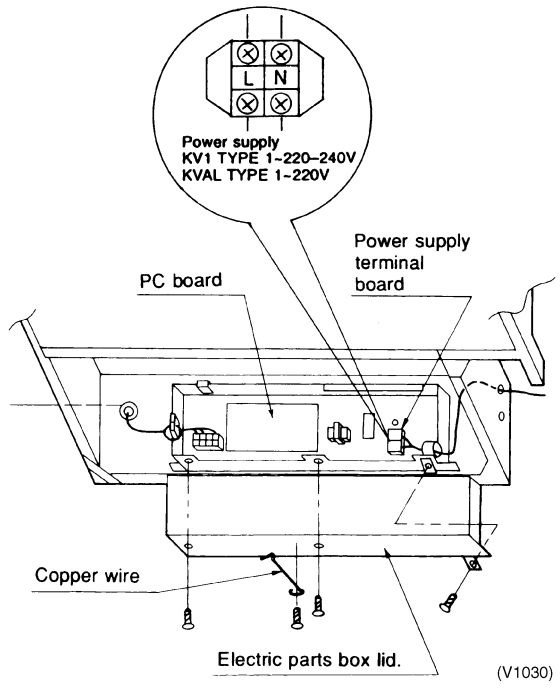

FXYD-Ceiling Mounted Duct Type (Low Silhouette Type)

1. Install the drain pipes.

- Keep piping as short as possible and slope it downwards so that air may not remain trapped inside the pipe.
- Keep pipe size equal to or greater than that of the connecting pipe. (vinyl pipe of 26 mm nominal diam.).
- Use the attached clamp and drain hose.
  Tighten the clamp firmly.
- Insulate the clamp with the attached sealing pad.
- Insulate the drain pipe inside the building.
- Drain piping may be clogged with dust and may result in water leakage and property damage.
- When obliged to install the indoor units in a dusty place, cover the drainpan by field supplied to prevent dust from falling into it.
- While installing indoor units, take care that dust etc. should not drop into the drainpan.
- It is nessesary to clean the drainpan.

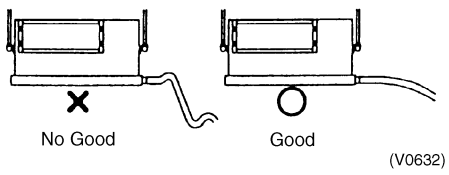

Все каталоги и инструкции здесь: https://splitsystema48.ru/instrukcii-po-ekspluatacii-kondicionerov.html

Si33-102.book Page 44 Tuesday, June 26, 2001 3:18 PM

(HOW TO INSTALL PIPING)

(1) Connect the drain pipe (field supplied) to the drain pipe, and insulate them.
(2) Connect the drain pipe to the drain outlet on the indoor unit, and tighten it with the clamp.
(3) Insulate both metal clamp and drain hose with the attached sealing pad.

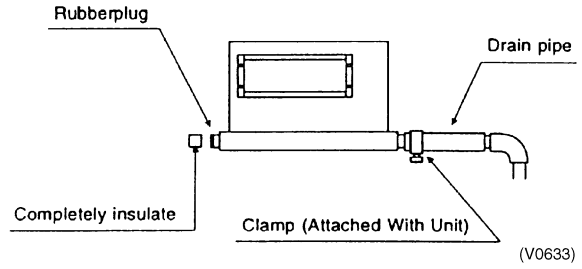

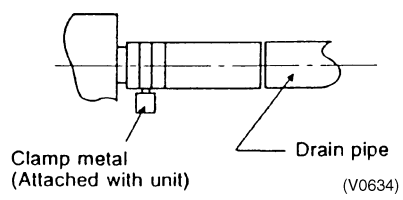

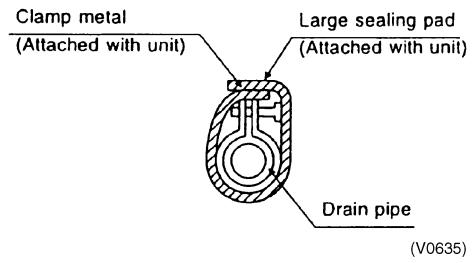

- To ensure a downward slope of 1:100, install hanging bars every 1 to 1.5 m.
- If unifying multiple drain pipes, install pipes shown below.

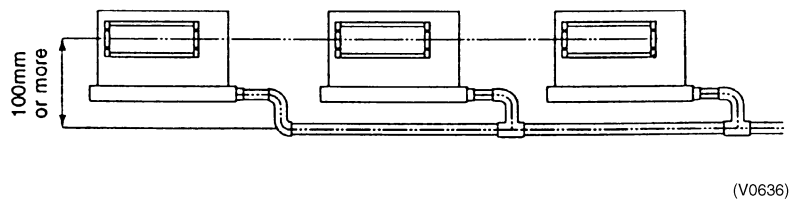

2. After piping work is finished, check drainage flows smoothly.

- Open the water inlet lid, add approximately 1000cc of water gradually and check drainage flow.

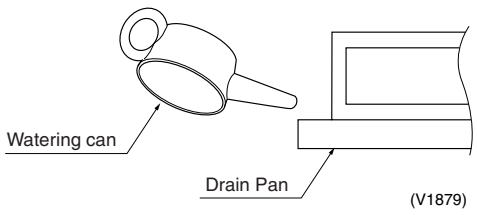

Все каталоги и инструкции здесь: https://splitsystema48.ru/instrukcii-po-ekspluatacii-kondicionerov.html

Si33-102.book Page 45 Tuesday, June 26, 2001 3:18 PM

FXYS-Concealed ceiling unit

1. Install the drain pipes.

- Keep piping as short as possible and slope it downwards so that air may not remained trapped inside the pipe.

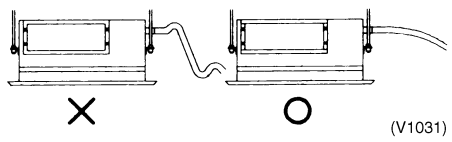

- Keep pie size equal to or greater than that of the connecting pipe (Vinyl pipe of 25 mm nominal diam. and 32 mm outer diam.).
- Use the attached drain hose and clamp. Tighten the clamp firmly.
- Insulate the clamp with the attached sealing pad.
- Insulate the drain hose inside the building.
- If the drain hose cannot be sufficiently set on a slope, fit the hose with drain raising piping as shown in the drawing.

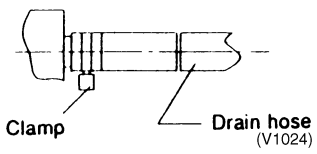

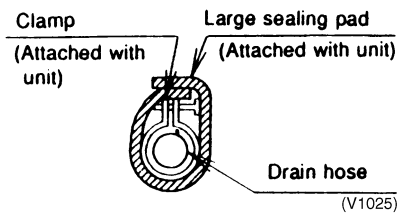

<HOW TO INSTALL PIPING>
(1) Connect the drain hose to the drain raising pipes, and insulate them.
(2) Connect the drain hose to the drain outlet on the indoor unit, and tighten it with the clamp.
(3) Insulate both metal clamp and drain hose with the attached sealing pad.

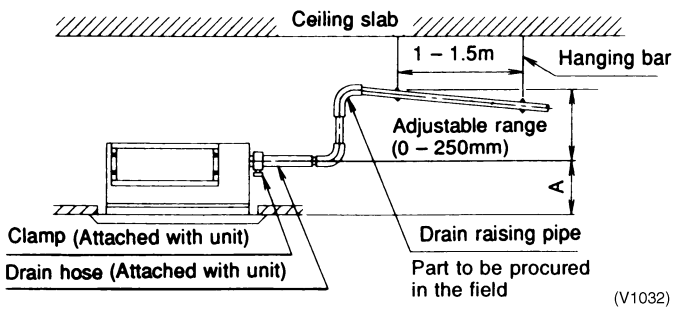

	A
When canvas buct is installed	350 - 530
When air inlet panel is directly installed	275

- To ensure a down ward slope of 1:100, install hanging bars every 1 to 1.5 m.
- If unifying multiple drain pipes, install pipes shown right.

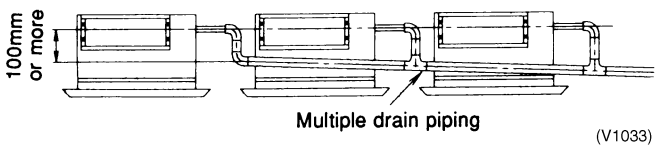

Все каталоги и инструкции здесь: https://splitsystema48.ru/instrukcii-po-ekspluatacii-kondicionerov.html

Si33-102.book Page 46 Tuesday, June 26, 2001 3:18 PM

2. After piping, check to make sure draining flows smoothly.

■ Open the water inlet lid, add approximately 1000 cc of water gradually and check drainage flow.

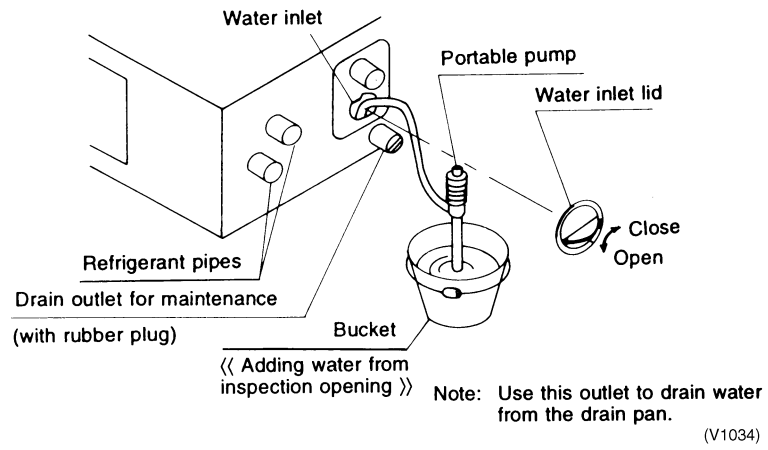

WHEN ELECTRIC WIRING WORK IS FINISHED

Check drainage flow during COOL running, explained under “TEST OPERATION”.

WHEN ELECTRIC WIRING WORK IS NOT FINISHED

Remove the electric parts box lid, connect a power supply and remote control to the terminals.
Next, press the inspection/test operation button “ TEST ” on the remote control. The unit will engage the test operation mode. Press the operation mode selector button “ ” until selecting FAN OPERATION “ ”. Then, press the ON/OFF button “ ”. The indoor unit fan and drain pump will start up. Check that the water has drained from the unit. Press “ TEST ” to go back to the first mode.

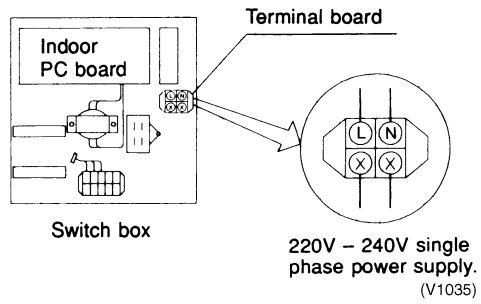

Все каталоги и инструкции здесь: https://splitsystema48.ru/instrukcii-po-ekspluatacii-kondicionerov.html

Si33-102.book Page 47 Tuesday, June 26, 2001 3:18 PM

FXYB-Concealed ceiling unit (small)

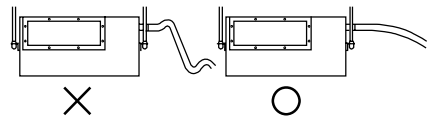

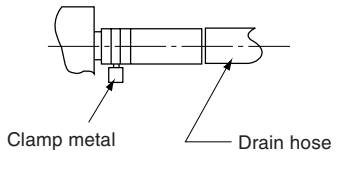

① Install the drain pipes.
- Keep piping as short as possible and slope it downwards so that air may not remaine trapped inside the pipe.
- Keep pipe size equal to or greater than that of the connecting pipe (Vinyl pipe of 25 mm nominal diam. and 32 mm outer diam.).
- Use the attached drain hose and clamp.
  Tighten the clamp firmly.
- Insulate the clamp with the attached sealing pad.
- Insulate the drain hose inside the building.
- If the drain hose cannot be sufficiently set on a slope, fit the hose with drain raising piping as shown in the drawing (part to be procured in the field).

〈 **HOW TO INSTALL PIPING** 〉
(1) Connect the drain hose to the drain raising pipes, and insulate them.
(2) Connect the drain hose to the drain outlet on the indoor unit, and tighten it with the clamp.
(3) Insulate both metal clamp and drain hose with the attached sealing pad.

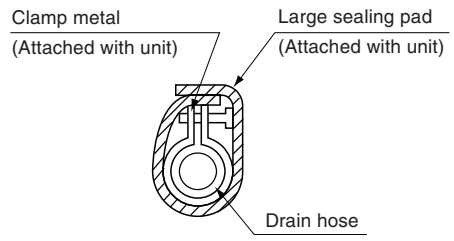

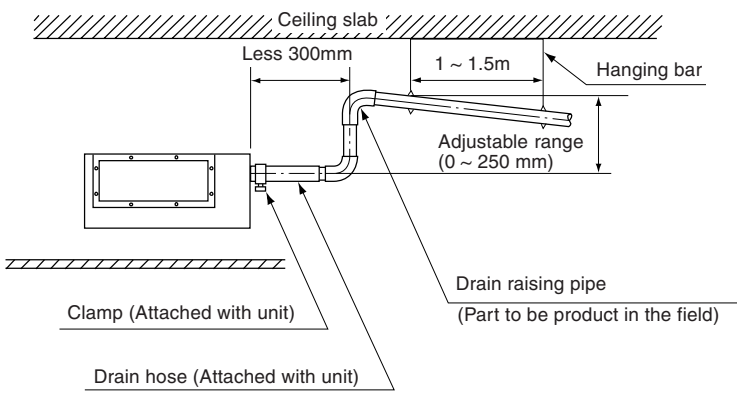

- To ensure a downward slope of 1:100, install hanging bars every 1 to 1.5 m.
- If unifying multiple drain pipes, install pipes shown right.

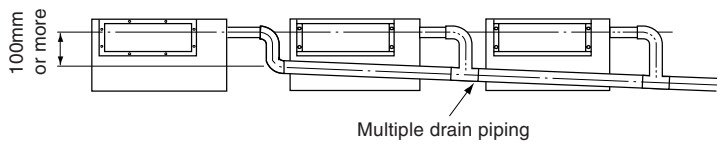

② After piping work is finished, check drainage flows smoothly.
- Open the water inlet lid, add approximately 1000 cc of water gradually and check drainage flow

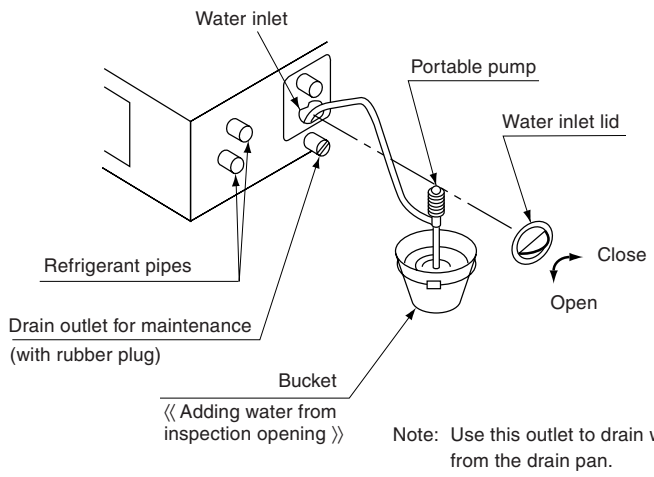

3PA60998-15S-6

Все каталоги и инструкции здесь: https://splitsystema48.ru/instrukcii-po-ekspluatacii-kondicionerov.html

Si33-102.book Page 48 Tuesday, June 26, 2001 3:18 PM

WHEN ELECTRIC WIRING WORK IS FINISHED

- Check drainage flow during COOL running, explained under “TEST OPERATION”.

WHEN ELECTRIC WIRING WORK IS NOT FINISHED

- Remove the electric parts box lid, connect a power supply and remote control to the terminals.

Next, press the inspection/test operation button “ TEST ” on the remote control. The unit will engage the test operation mode. Press the operation mode selector button “ ” until selecting FAN OPERATION “ ”. Then, press the ON/OFF button “ ”. The indoor unit fan and drain pump will start up. Check that the water has drained from the unit. Press “ TEST ” to go back to the first mode.

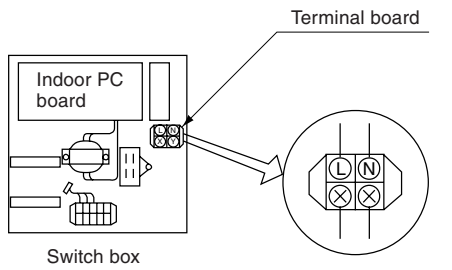

3PA60998-15S-7

FXYM-Concealed ceiling unit (large)

(1) Install the drain pipes.

- Keep piping as short as possible and slope it downwards so that air may not remaine trapped inside the pipe.
- Keep pipe size equal to or greater than that of the connecting pipe (Vinyl pipe of 25 mm nominal diam. and 32 mm outer diam. (FXYM40–125K)).
- The diameter of the piping is the same as that of the connecting pipe (PS1B), and should be kept equal to or greater than that of the connecting pipe. (FXYM200·250KJ)
- Use the attached drain hose and clamp. Tighten the clamp firmly.
- Insulate the clamp metal with the attached sealing pad.
- Insulate the drain hose inside the building.
- **There is negative pressure inside the unit relative to atmospheric pressure when the unit is running, so be sure to provide drain frap on the drain outlet. (See the figure)**
- **In order to prevent foreign matter from building up inside the piping, you should avoid curves as much as possible, and arrange so the trap can be cleaned.**

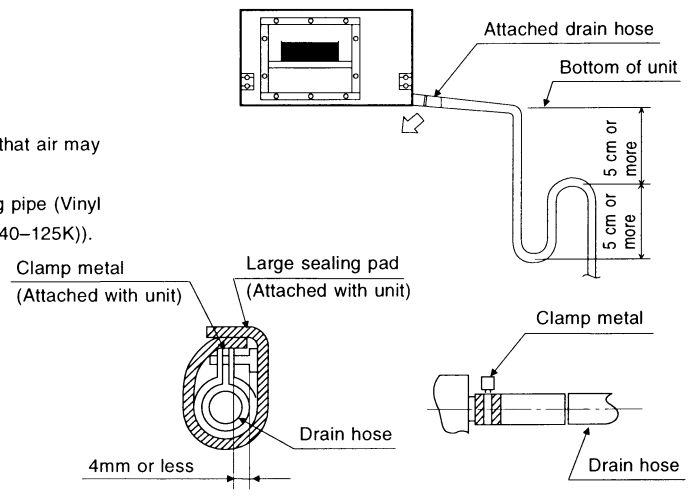

〈 FXYM40·50·63·80·100·125K 〉

Example drain trap installation (FXYM200·250KJ)

- If directly connected to the unit:

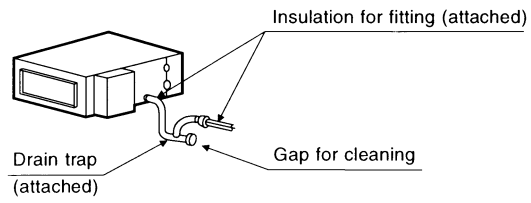

NOTES)

- Be sure to insulate both sides of the drain trap connections.
- Install the drain trap so that the gap for cleaning is straight below. (±20° or less)
- If installing central drain piping, install according to the following right figure. (Install a drain trap for each indoor unit.)

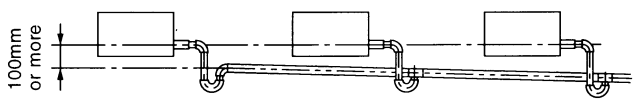

(2) After piping work is finished, check drainage flows smoothly.

C : 3PA60998-4H-7

Все каталоги и инструкции здесь: https://splitsystema48.ru/instrukcii-po-ekspluatacii-kondicionerov.html

Si33-102.book Page 49 Tuesday, June 26, 2001 3:18 PM

FXYH-Ceiling suspended unit

(1) Rig drain piping

- The drain pipe outlet direction can be chosen from the right rear, right, left rear, and left. Refer to "REFRIGERANT PIPING WORK" (Fig. 16) for right rear and right direction, and refer to Fig. 22 for left rear and left direction.

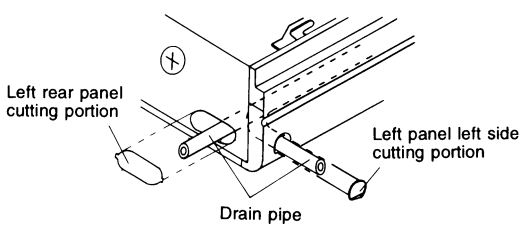

Fig. 22

- For right and left drain piping outlet, remove the copper wire on the side and screw back as before. (Refer to Fig. 23)

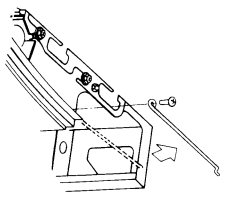

Fig. 23

- For left drain pipe outlet, remove the rubber plug and the insulation on the drain pipe connecting opening on the left side of the unit and change the position to the right side.
- The diameter of the drain pipe should be greater than or equal to the diameter of the connecting pipe. (Vinyl tube; pipe size: 20 mm; outer dimension: 26 mm)
- Keep the drain pipe short and sloping downwards at a gradient of at least 1/100 to prevent air pockets from forming. (Refer to Fig. 24)

(When drain hose is connected)

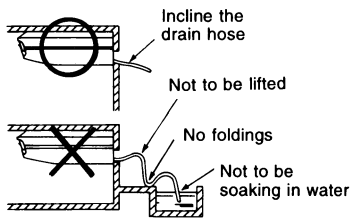

Fig. 24

- Use the attached drain hose ④ and clamp ⑤. Insert the drain hose into the drain socket, up to the gray tape. Tighten the clamp until the screw head is less than 4 mm from the hose. (Refer to Fig. 25, 26)
- Wrap the attached sealing pad ⑪ over the clamp and drain hose to insulate. (Refer to Fig. 26)
- No folding of drain hose inside the indoor unit. (Refer to Fig. 27)

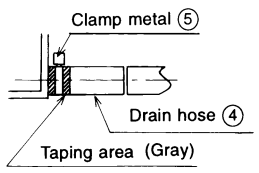

Fig. 25

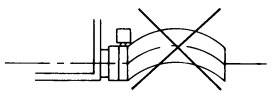

Fig. 27

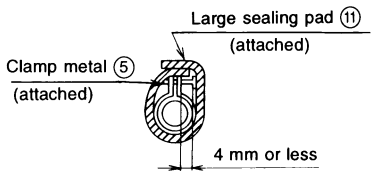

Fig. 26

(2) Confirm that smooth drainage is achieved after the piping work.

- Add 600 cc of water in the drain pan from the air outlet for confirming drainage. (Refer to Fig. 28)

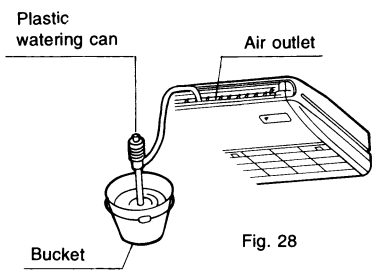

Fig. 28

3PA60996-2J-7

Все каталоги и инструкции здесь: https://splitsystema48.ru/instrukcii-po-ekspluatacii-kondicionerov.html

Si33-102.book Page 50 Tuesday, June 26, 2001 3:18 PM

FXYA-Wall mounted unit

① Rig the drain piping.
- Keep the drain hose short and sloping downwards, as shown in the drawing, to prevent air pockets from forming.
- Use a vinyl tube of the same size (nominal diameter: 20 mm, outer diameter: 26 mm) as the pipe connection, or larger.
- Insulate all piping inside the building.

② After piping work is finished, check drainage flows smoothly.
- See "INDOOR UNIT INSTALLATION" and detach the left side panel.
- Slowly add water to the left side of the drainage pan to check drainage flow.

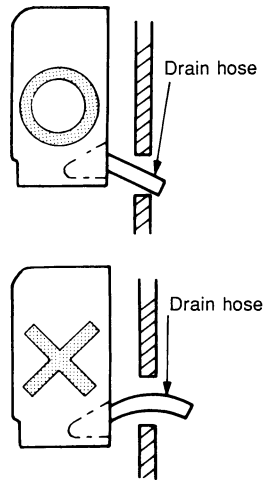

3PA60996-1G-4

FXYLM-Concealed floor standing unit

① Connect the drain hose ① using the attached hose and parts, as shown in the right drawing.

② After piping work is finished, check drainage flows smoothly.

③ Be sure to insulate all indoor pipes.

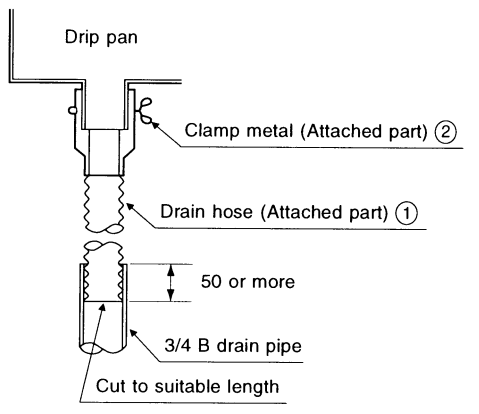

3PA60996-7G-6

Все каталоги и инструкции здесь: https://splitsystema48.ru/instrukcii-po-ekspluatacii-kondicionerov.html

Si33-102.book Page 51 Tuesday, June 26, 2001 3:18 PM

FXYM-KF-Outdoor Air Processing Unit

1. Install the drain pipes.

- Keep piping as short as possible and slope it downwards so that air may not remaine trapped inside the pipe.
- The diameter of the piping is the same as that of the connecting pipe (PS1B), and should be kept equal to or greater than that of the connecting pipe.
- Insulate the drain hose inside the building.
- **There is negative pressure inside the unit relative to atmospheric pressure when the unit is running, so be sure to provide drain frap on the drain outlet. (See the figure)**
- **In order to prevent foreign matter from building up inside the piping, you should avoid curves as much as possible, and arrange so the trap can be cleaned.**

Example drain trap installation

- If directly connected to the unit:

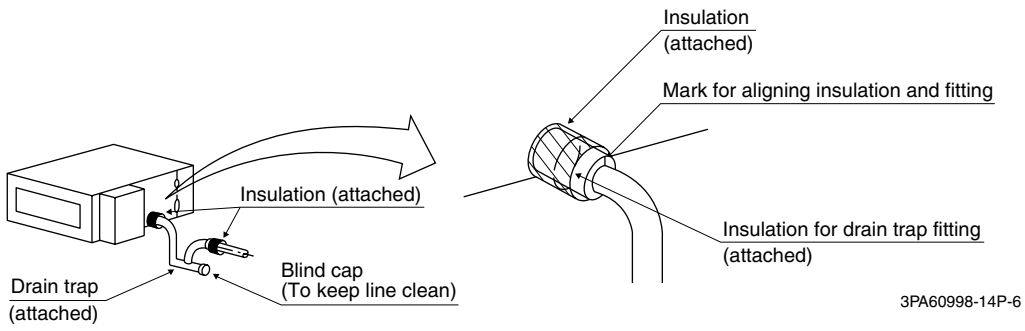

Note:

- Be sure to insulate both sides of the drain trap connections.
- Install the drain trap so that the gap for cleaning is straight below. (±20˚ or less)
- If installing central drain piping, install according to the following figure.

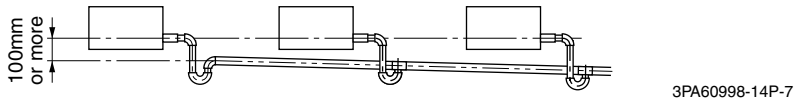

2. After piping work is finished, check drainage flows smoothly.

3.2.10 Electrical Work

Control Wiring

1. Compatible types of wire

Wiring Specifications

Wiring Type	Shield Wire (2 wire) (See NOTE 1, 2)
Size	0.75~1.25 mm²

Notes:

1. Sheathed wire may be used for transmission winings, but they do not comply with EMI (Electromagnetic Interference) (EN55014). When using sheathed wire. EMI must conform to Japanese standards stipulated in the Electric Appliance Regulatory Act. (If using a sheathed wire, the grounding shown in the figure on the left is unnecessary.)
2. For FXYA indoor unit, use sheathed wire.

2. Problems arising from the use of unsuitable cable

a) **When cable less than 0.75 mm² is used**
Where the control wiring is particularly long the transmission signals may, for example, become unstable and the terminal relay cease to function. (Reduced voltage) The control system may become unduly subject to noise interference.

Все каталоги и инструкции здесь: https://splitsystema48.ru/instrukcii-po-ekspluatacii-kondicionerov.html

Si33-102.book Page 52 Tuesday, June 26, 2001 3:18 PM

b) **When cable more than 1.25 mm² is used**
When wiring indoor units together, the terminal block will not be able to accommodate 2 cables simultaneously if the cables are larger than 1.25 mm².

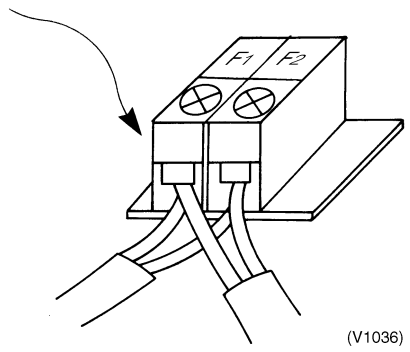

c) For multi-core cable
The greater play between wires, the more the transmitted wave is distorted and transmission destabilized.

d) In the case of a remote control with a three way selector for cooling, heating and ventilation, twin core cable should be used when the ventilation mode is not required and three core cable should be used when three way selection is required.

e) Since there is a considerable risk of mixing high (220 to 240V) and low voltages in the case of, for example, a PCB for remote control, multiple core cable must not be used.
(Internal wiring regulations and dielectric strengths of cables are relevant here.)

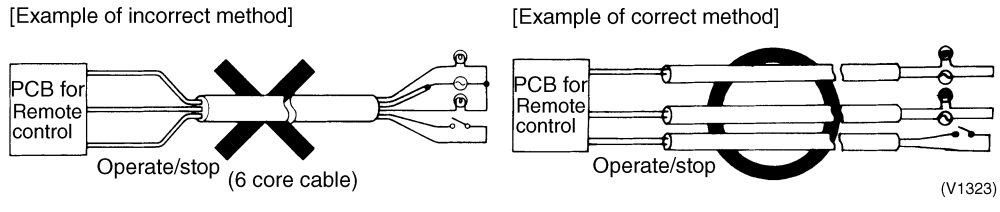

f) Other important points
1. The refrigerant circuit and the indoor/outdoor connecting cables must correspond exactly.
2. A suitable gap must be left between the control cables and the power supply cables where these are laid alongside each other. (See “Separation of control and power supply cables” on page 53)

Power Supply (Cabling of Main Power Supply)

1. Choosing a circuit breaker
The power supply work must conform to local regulations. In Japan, the relevant regulations are the MITI ordinance determining technical standards for electrical equipment, and the Internal Wining Provisions.

a) The indoor unit circuit breakers
■ In accordance with the provisions for internal wiring (JEAC8001-1986), power may be supplied by means of crossover lines between the indoor units in a single system branch circuit.

Branch circuit facility (Internal wiring provisions 305-2)
The motors must be set up with a dedicated branch circuit for each unit. However, where they correspond to any of the following situations, this limitation does not apply.
① When used in a 15A branch circuit of a 20A circuit breaker branch circuit
Note: It is recommended that the total rated capacity of the motors set up in a 15A branch circuit or a 20A circuit breaker branch circuit should be no more than 2.2kW.

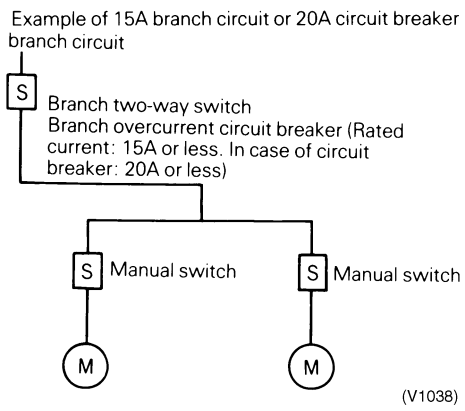

Все каталоги и инструкции здесь: https://splitsystema48.ru/instrukcii-po-ekspluatacii-kondicionerov.html

Si33-102.book Page 53 Tuesday, June 26, 2001 3:18 PM

When using high static pressure indoor units the fan motors must have a large capacity. Single phase 220~240V branch circuits are therefore required for each indoor unit.

Example: Up to 10 × 2.5HP indoor units or 5 × 5HP indoor units can be wired together.

b) The outdoor unit circuit breaker

- A separate circuit breaker must be fitted for each unit.
- The motors incorporated into air conditioning system compressors are treated as special motors under the internal wiring provisions. The values which apply to normal motors are thus somewhat variance with those which apply to such compressor motors. You are recommended to adhere strictly to the procedures laid down in the technical materials included in, for example, the system design manuals.

Calculation of load (Refer to local regulation.)

With respect to the calculation of load for motors with special applications such as elevator, air conditioner and refrigerator motors, not only must the rated current be shown on the name plate of the said motor or piece of apparatus but it must also included all special characteristics or applications.

Note: The rated current for package air conditioners which use special purpose built-in compressor motors in their compressors in 1.2 times the operating current shown on the name plate.

2. Cable size

The thickness of the cables in the circuits (branch circuits) providing the main power supply to each item of apparatus must satisfy the following conditions:

1. To have a current tolerance of 40% or more of the rated current of the overcurrent circuit breaker (wiring circuit breaker, etc.).
2. To have a current tolerance of 125% or more of the rated current in cases where the rated current of the apparatus is 50A or less.
3. To have a current tolerance of 110% or more of the rated current in cases where the rated current of the apparatus is more than 50A.
4. To satisfy voltage drop standards.

3. Separation of control and power supply cables

- **If control and power cables are run alongside each other** then there is a strong likelihood of operational faults developing due to interference in the signal wiring caused by electrostatic and electromagnetic coupling.
  The table below indicates our recommendations as to the appropriate spacing of control and power cables **where these are to be run side by side.**

Current capacity of power cable		Spacing (d)
100V or more	10A or less	300mm
	50A	500mm
	100A	1000mm
	100A or more	1500mm

Notes:

1. The figures are based on an assumed length of parallel cabling up to 100m. For lengths in excess of 100m the figures will have to be recalculated in direct proportion to the additional length of cable involved.
2. If the power supply waveform continues to exhibit some distortion the recommended spacing in the table should be increased.

If the cables are laid inside conduits then the following points must also be taken into account when grouping various cables together for introduction into the conduits.

1. Power cables (including power supply to the air conditioner) and signal cables must not be laid inside the same conduit. (Power cables and signal cables must each have their own individual conduits.)
2. In the same way, when grouping the cables, power and signal cables should not be bunched together.

Все каталоги и инструкции здесь: https://splitsystema48.ru/instrukcii-po-ekspluatacii-kondicionerov.html

Si33-102.book Page 54 Tuesday, June 26, 2001 3:18 PM

■ **Important points**

1. Earthing

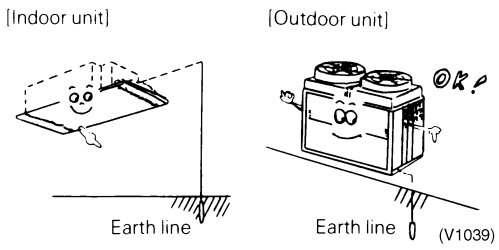

■ Have the indoor and outdoor units both been earthed?

* If the apparatus is not properly earthed then there is always a risk of electric shocks. The earthing of the apparatus must be carried out by a qualified person.

3.2.11 Duct Work (Indoor)

■ **Operational steps**

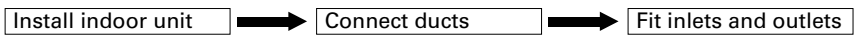

(V1040)

Taking Account of Noise and Vibration

a) Canvas joints must be used between the main unit and the air suction and discharge ducts. These fittings are designed to inhibit secondary noise resulting from the transmission of vibrations and operating noise from the main unit to the ducts or to the rest of the building.

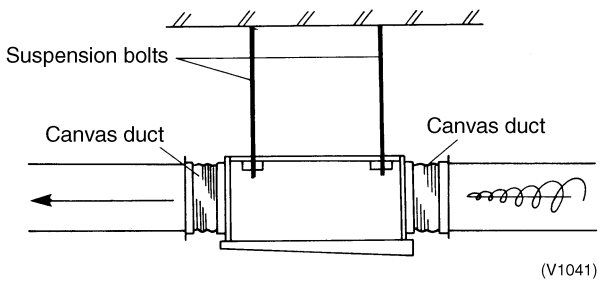

b) The speed of the airflow should be taken into account when choosing air suction and distribution grills in order to keep wind noise to minimum.

■ **Important points**

1. The air discharge duct must be thermally insulated.
2. The canvas duct on the inlet side must be set in a metal framework.
3. The air suction and distribution grills should be positioned to take into account the possibility of short circuits.
4. Static pressure should be checked to ensure that the airflow is within the specified range.
5. The air filter must be easily detachable.

Все каталоги и инструкции здесь: https://splitsystema48.ru/instrukcii-po-ekspluatacii-kondicionerov.html

Si33-102.book Page 55 Tuesday, June 26, 2001 3:18 PM

3.2.12 Installation of Outdoor Unit

■ **Operational steps**

Prepare foundation → Install outdoor unit

(V1150)

Foundation of Units

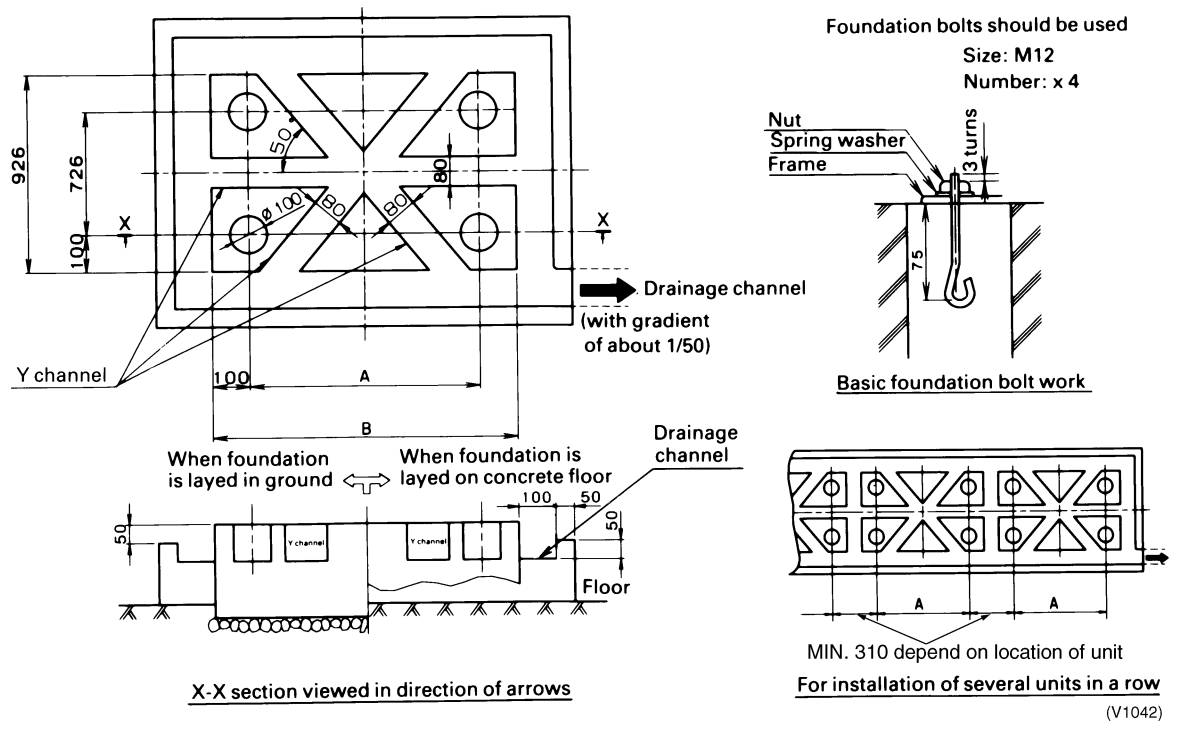

Model	A	B
RXY8KA RXY10KA RXE8KA RXE10KA	1000	1200
RXY16KA RXY20KA	2290	2490

Notes:

1. Standard concrete mix: 1 cement / 2 sand / 4 gravel with 10 reinforcing rods (approx. 300mm intervals).
2. Mortar should be used to level the surface. The edge of the concrete surface should be bevelled.
3. When setting the foundation on a concrete floor macadam is not required but the surface of the concrete should be broken up to make it uneven.
4. A drainage channel should be made around the foundation to cater for waste water around the machinery.
5. When installing a unit on the roof be sure to check the strength of the roof and pay special attention to waterproofing requirements.
6. If the unit is to be installed on a frame, install the waterproofing board within a distance of 150mm under the unit in order to prevent infiltration of water coming from under the unit.

■ **Bolt pitch**

RXY8/10KA, RXE8/10KA

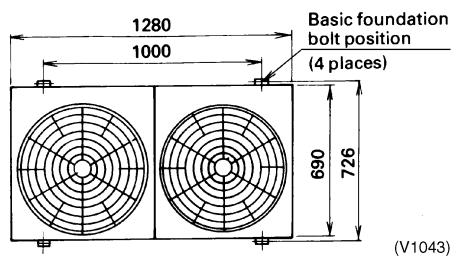

RXY16/20KA

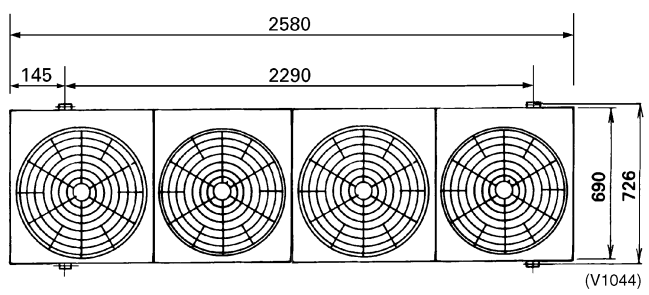

Все каталоги и инструкции здесь: https://splitsystema48.ru/instrukcii-po-ekspluatacii-kondicionerov.html

Si33-102.book Page 56 Tuesday, June 26, 2001 3:18 PM

■ **Caution in installation**

1. Execute the installation work by checking the foundation strength and levelness to avoid any occurrence of vibration and noise.
   Fix the unit tightly with foundation bolts. (Prepare 4 sets of M12 foundation bolts with proper nuts and washers.)
   The proper length of the foundation bolts form the surface of the base is 20mm.
   The foundation must support the unit in the range above the shaped portion in the figure 1.
2. Remove the fitting (yellow color) for loading as shown in the figure 2.
   Tighten the installation bolt of compressor firmly again.
   2 fittings are attached to the front side of a single compressor.

Caution Install the unit securely in case of earthquake an typhoon, cyclone, hurricane or other strong wind. The unit may topple or cause another accident if improperly set up.

Unpacking and Placing the Unit

1. Remove the wooden crafte from the unit.
2. Remove the four screws fixing the unit to the pallet.
3. The unit must be installed on a solid longitudinal foundation (steelbeam frame or concrete) as indicated in figure 1.

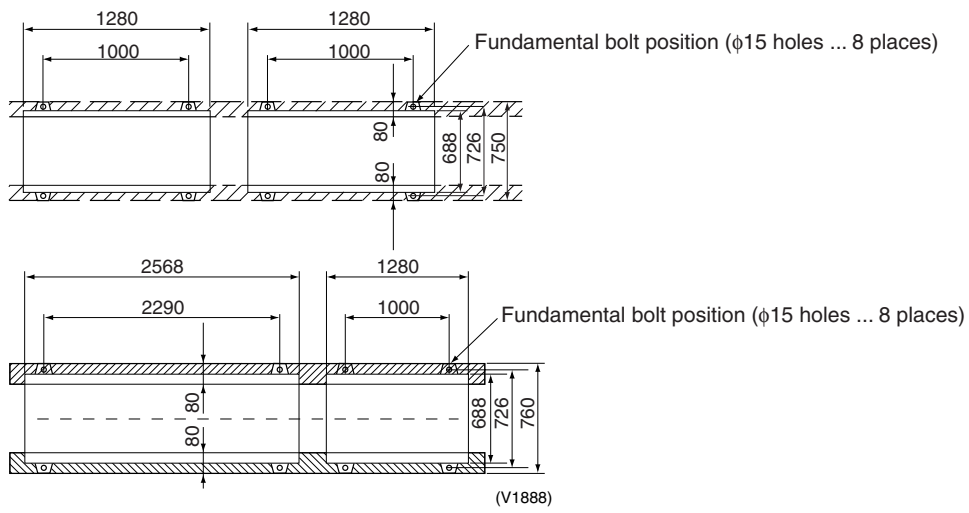

Bad Example

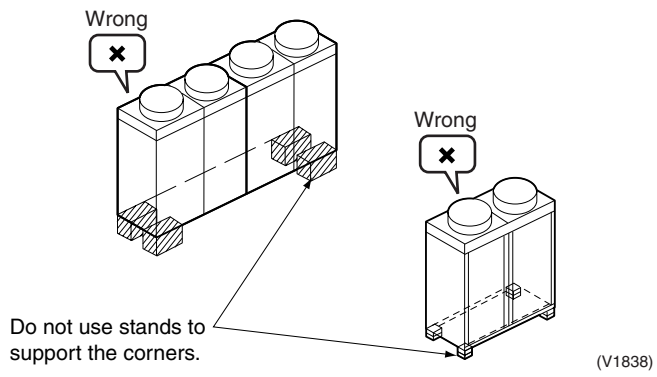

Note: Maximum height of the foundation is 150mm.

Все каталоги и инструкции здесь: https://splitsystema48.ru/instrukcii-po-ekspluatacii-kondicionerov.html

Si33-102.book Page 57 Tuesday, June 26, 2001 3:18 PM

4. Lift the unit from the pallet and place it on its installation position.
5. Fasten the unit in place using four anchor bolts M12.
6. Remove the upper and lower service plate.
7. When closing the service panels take care that the tightening torque does not exceed 4.1 Nm.
8. Remove the yellow shipping stays from the compressor support as shown in the figure (2 stays per single compressor). Tighten the installation bolts firmly again afterwards.

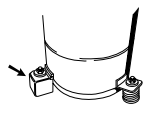

Fig. 3
(V0898)

Service Space

It is extremely important that enough space is left when installing the equipment to allow routine servicing and maintenance to be carried out without undue hindrance. It is particularly important to bear in mind the work which will be required if the compressor needs to be replaced. (The layout of the pipework can sometimes cause considerable difficulties if the compressor needs to be changed.)

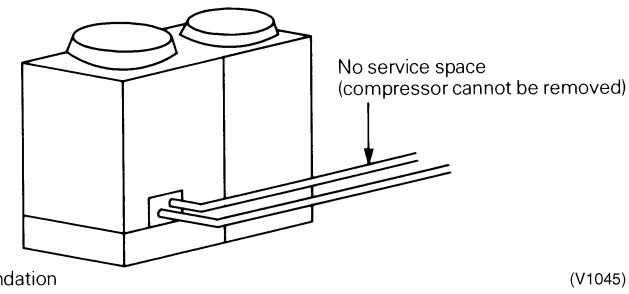

Prevention of Short Circuits

The unit must be installed in a well ventilated area, otherwise short circuiting will occur. Special care should be taken in situations such as that illustrated in the diagram below since additional fittings such as air discharge ducts may also be required. (Attention should be paid to the duct's resistance)

Conditions for installation under the eaves

- When L ≥ 1m then N must be ≥ M.
- When L < 1m then K must be ≥ M.
  Where K is the required dimension for a single unit installation.

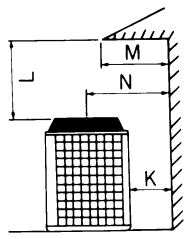

Installation under the eaves
(V1046)

Conditions for installation where there is a horizontal obstruction above the unit

- When L ≥ 3m then no special action is required.
- When L < 3m then a air discharge duct with resistance within 3mmH_2O is required.
  Where K measures a little more than the required K dimension for a single unit installation.

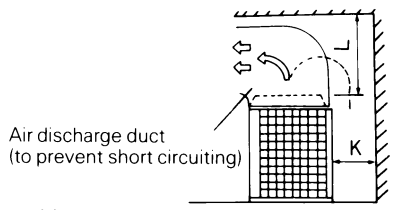

Method of dealing with overhead obstruction
(V1047)

Все каталоги и инструкции здесь: https://splitsystema48.ru/instrukcii-po-ekspluatacii-kondicionerov.html

Si33-102.book Page 58 Tuesday, June 26, 2001 3:18 PM

Techniques for Prevention of Snow Accumulation in Areas of High Snowfall

1. Snow must be prevented from accumulating around the outdoor unit's air inlet and air discharge outlet and one possible answer would be to fit a snow hood.

[Points relating to design of snow hood]

- In order to ensure the required outdoor unit airflow the duct resistance must be less than the permissible eternal static pressure of 3 mmH_2O.
- The structure must be robust enough to withstand the weight snow building up on it and strong winds or typhoons.
- The construction of the unit should be such as to avoid short circuiting between suction air and discharge air.
  A snow hood is available from Daikin as an optional accessories so please make use of it where necessary.

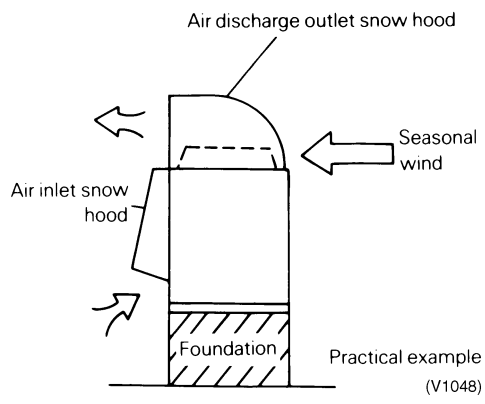

2. The unit should be oriented in such a way as to prevent the air heat exchanger from facing into driving snow.
3. The outdoor unit should be set at a higher level in relation to the surface on which it is mounted than the anticipated depth of snow accumulation in order ot prevent it from being buried.
4. Measures to combat lightning and burying by drifting snow.
   The proposed installation spot should be thoroughly investigated and on no account should the unit be placed beneath eaves or trees where snow is likely to drift.

When units are located on different floors

Special care must be taken with respect to short circuits when units are installed on each floors.

Все каталоги и инструкции здесь: https://splitsystema48.ru/instrukcii-po-ekspluatacii-kondicionerov.html

Si33-102.book Page 59 Tuesday, June 26, 2001 3:18 PM

Selection of Location

When placing several units in close proximity to each other some thought should be given to the possibility of short circuiting and also to the provision of adequate space for servicing. (For more detailed information please refer to the system design materials.)
This unit, both indoor and outdoor, is suitable for installation in a commercial and light industrial environment. If installed as a household appliance it could cause electromagnetic interference.

The VRV plus outdoor units should be installed in a location that meets the following requirements:

1. The foundation is strong enough to support the weight of the unit and the floor is flat to prevent vibration and noise generation.
2. The space around the unit is adequate for servicing and the minimum space for air inlet and air outlet is available. (Refer to figure 1 and choose one of both possibilities.)

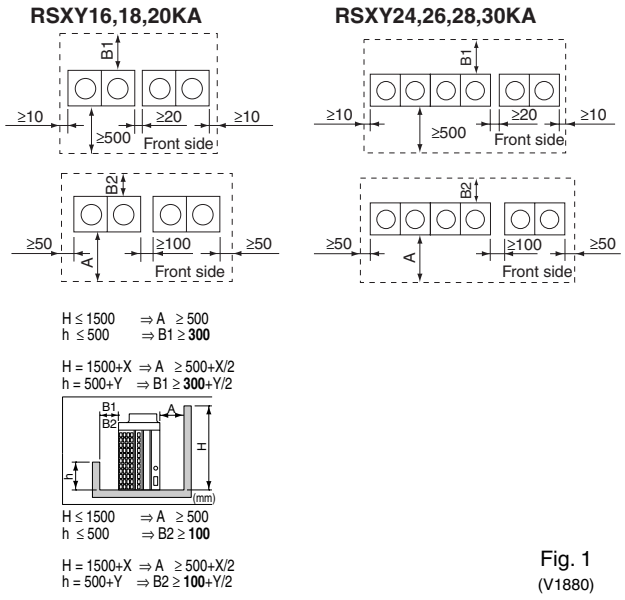

Fig. 1
(V1880)

3. There is no danger of fire due to leakage of inflammable gas.
4. Ensure that water cannot cause any damage to the location in case it drips out the unit (e.g. in case of a blocked drain pipe).
5. The piping length between the outdoor unit and the indoor unit may not exceed the allowable piping length. (See “Example of connection”.)
6. Select the location of the unit in such a way that neither the discharged air nor the sound generated by the unit disturb anyone.
7. Make sure that the air inlet and outlet of the unit are not positioned towards the main wind direction. Frontal wind will disturb the operation of the unit. If necessary, use a windscreen to block the wind.

Caution

1. An inverter air conditioner may cause electronic noise generated from AM broadcasting. Examine where to install the main air conditioner and electric wires, keeping proper distances away from stereo equipment, personal computers, etc.

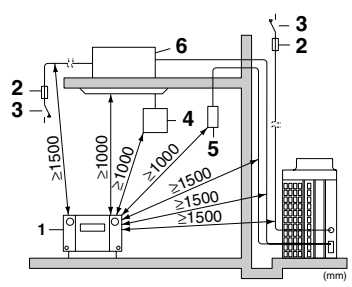

Fig. 2
(V0850)

1. Personal Computer or Radio
2. Fuse
3. Earth Leak Detector
4. Remote Control
5. Cool/Heat Selector
6. Indoor Unit

If the electric wave of AM broadcasting is particularly weak, keep distances of 3m or more and use conduit tubes for power and transmission lines.

2. In heavy snowfall areas, select an installation site where snow will not affect operation of the unit.
3. The refrigerant R-22 itself is nontoxic, nonflammable and is safe. If the refrigerant should leak however, its concentration may exceed the allowable limit depending on room size. Due to this it could be necessary to take measures against leakage. Refer to the chapter 'Caution for refrigerant leaks'.

Все каталоги и инструкции здесь: https://splitsystema48.ru/instrukcii-po-ekspluatacii-kondicionerov.html

Si33-102.book Page 60 Tuesday, June 26, 2001 3:18 PM

4. Test Operation

4.1 Procedure and Outline

The operation sequence is the most important thing for test operation. Follow the following outline.

4.1.1 Check the Following Before Turning Power On

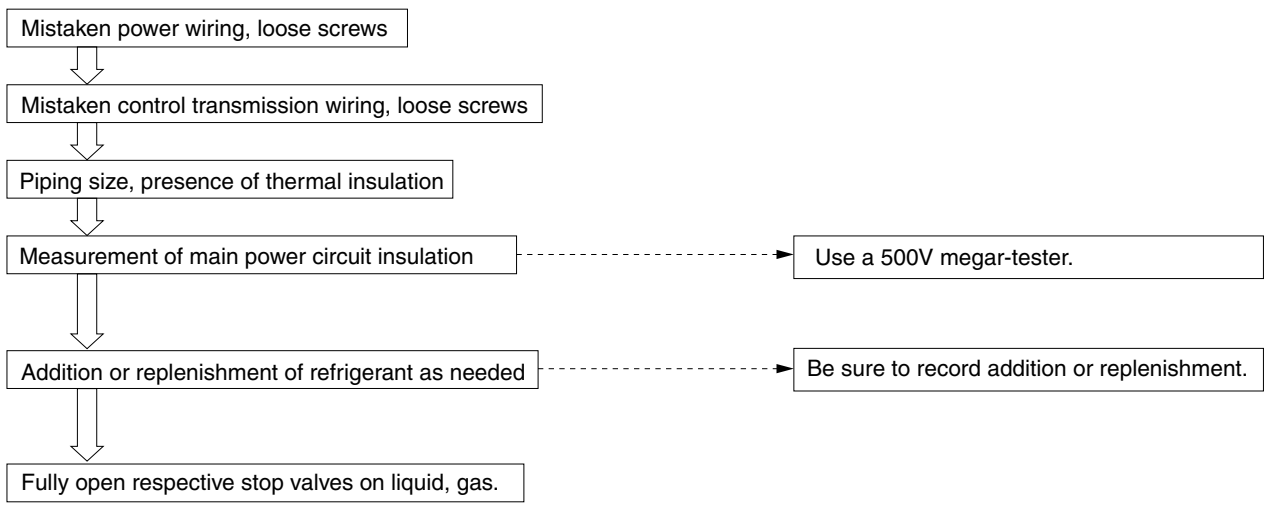

(V1324)

4.1.2 Turn Power On

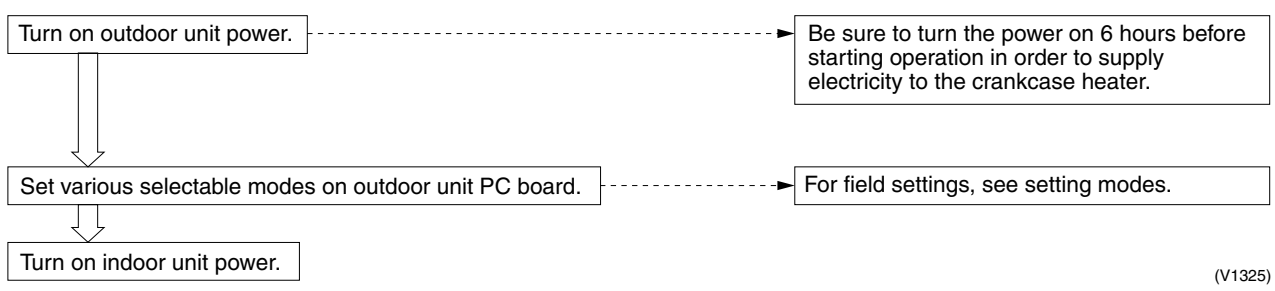

(V1325)

Refer to Setting Modes on P65

Все каталоги и инструкции здесь: https://splitsystema48.ru/instrukcii-po-ekspluatacii-kondicionerov.html

Si33-102.book Page 61 Tuesday, June 26, 2001 3:18 PM

4.1.3 Check Operation

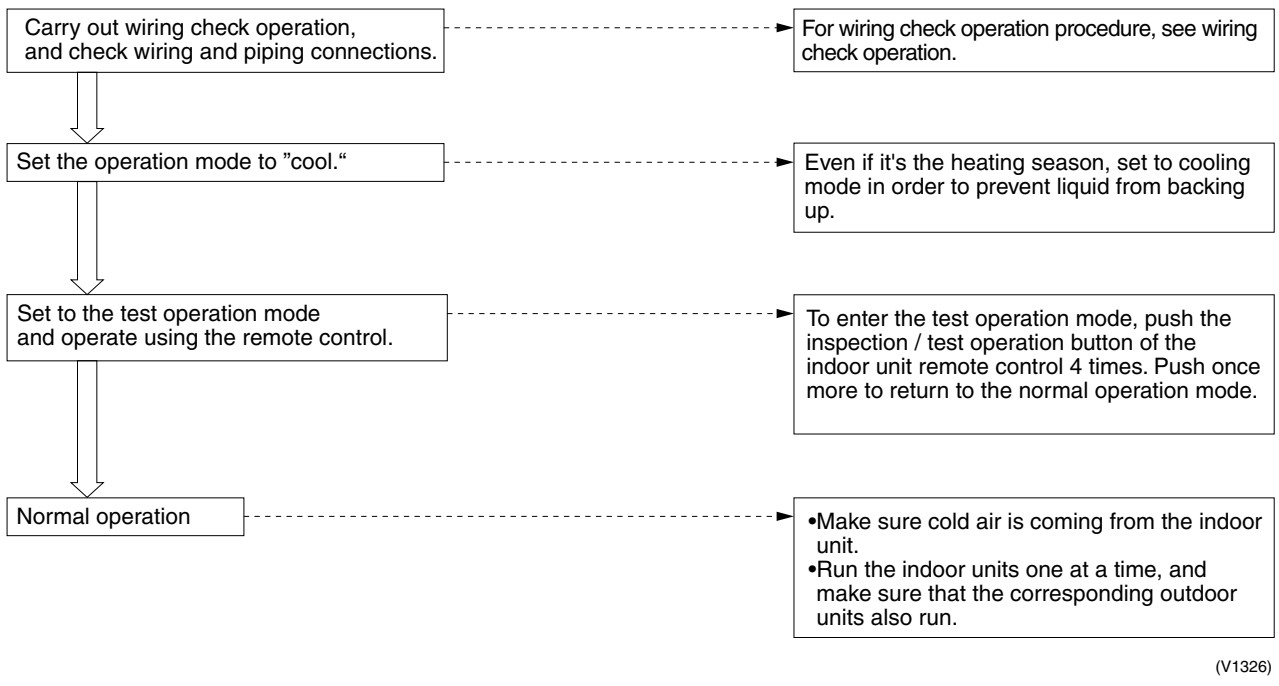

(V1326)

Refer to Wiring Check Operation on P80

Caution

When the 400 volt power supply is applyed to "N" phase by mistake, replace Inverter P.C.B (A2P) and control transformer (T1R, T2R) in switch box together.

(V0847)

Все каталоги и инструкции здесь: https://splitsystema48.ru/instrukcii-po-ekspluatacii-kondicionerov.html

Si33-102.book Page 62 Tuesday, June 26, 2001 3:18 PM

4.2 Operation when Power is Turned On

4.2.1 When Turning On Power for the First Time

The unit cannot be run for up to 12 minutes to automatically set the master power and address (indoor-outdoor address, etc.).

- Outdoor unit ... Warning lamp (H2P) lights
  Test lamp (H2P) blinks
  Can also be set during operation described above.
- Indoor unit ... If ON button is pushed during operation described above, the “UH” malfunction indicator blinks. (Returns to normal when automatic setting is complete.)

4.2.2 When Turning On Power the Second Time and Subsequent

Tap the RESET button (BS5) on the outdoor unit PC board. Operation becomes possible after setting up for about 2 minutes. If you do not push the RESET button, the unit cannot be run for up to 10 minutes to automatically set master power.

- Outdoor unit ... Warning lamp (H2P) lights
  Test lamp (H2P) blinks
  Can also be set during operation described above.
- Indoor unit ... If ON button is pushed during operation described above, the operation lamp lights but the compressor does not operate. (Returns to normal when automatic setting is complete.)

4.2.3 When an Outdoor Unit or Indoor Unit Has Been Added, or Indoor / Outdoor Units PC Board Has Been Changed

Be sure to push and hold the wiring change button for 5 seconds or longer. If not, the addition cannot be recognized. In this case, the unit cannot be run for up to 12 minutes to automatically set the address (indoor-outdoor address, etc.).

- Outdoor unit ... Warning lamp (H2P) lights
  Test lamp (H2P) goes off
  Can also be set during operation described above.
- Indoor unit ... If ON button is pushed during operation described above, the “UH” or “U4” malfunction indicator blinks. (Returns to normal when automatic setting is complete.)

Все каталоги и инструкции здесь: https://splitsystema48.ru/instrukcii-po-ekspluatacii-kondicionerov.html

Si33-102.book Page 63 Tuesday, June 26, 2001 3:18 PM

4.3 Outdoor Unit PC Board Ass'y

Outdoor Unit

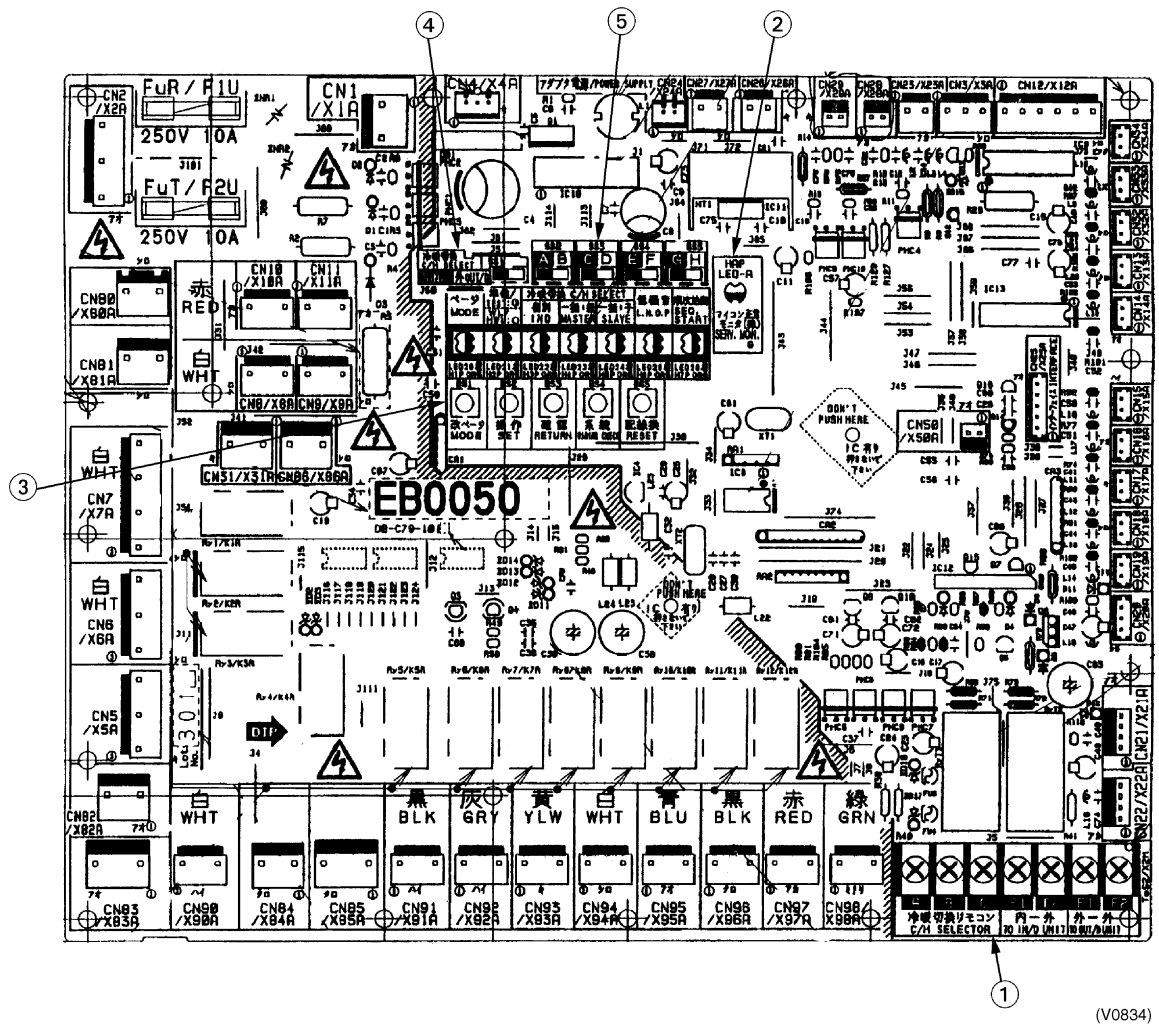

Все каталоги и инструкции здесь: https://splitsystema48.ru/instrukcii-po-ekspluatacii-kondicionerov.html

Si33-102.book Page 64 Tuesday, June 26, 2001 3:18 PM

1	Transmission terminal Indoor unit, Cool/Heat selector Outdoor - Outdoor	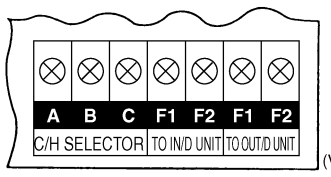 (V0835)
2	Service monitor LED (Green)	(V0836)
3	Function setting mode switch and LED	LED 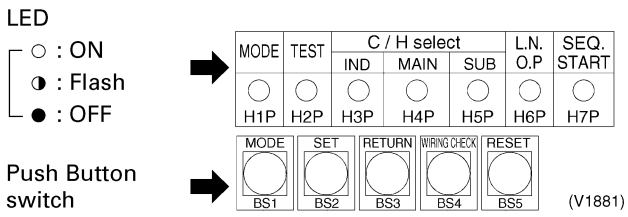 (V1881)
4	Function of setting between cooling and heating	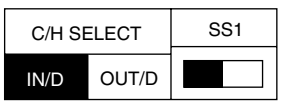 (V0838)
5	Outdoor unit Capacity setting switch	Switches for capacity setting when the outdoor unit PC board is replaced to spare parts PC board. 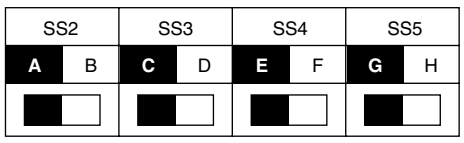 (V0848) Refer table below.

	SS2		SS3		SS4		SS5	
	A	B	C	D	E	F	G	H
RSXY16KA		■		■	■			■
RSXY18KA		■	■			■		■
RSXY20KA		■	■			■		■
RSXY24KA		■	■		■		■	
RSXY26KA		■	■		■		■	
RSXY28KA	■			■		■	■	
RSXY30KA	■			■		■	■	

Capacity setting table

↑
Position of dip switch knob

Note: Resetting of power supply switch is necessary after capacity setting.

Все каталоги и инструкции здесь: https://splitsystema48.ru/instrukcii-po-ekspluatacii-kondicionerov.html

Si33-102.book Page 65 Tuesday, June 26, 2001 3:18 PM

4.4 Setting Modes

There are the following three setting modes.

◆ **Setting mode 1 (H1P off)**

Used to select the cool/heat setting, low-noise run and sequential start.

◆ **Setting mode 2 (H1P on)**

Used to modify the running status and to program addresses, etc. Usually used in servicing the system.

◆ **Monitor mode (H1P flashing)**

Used to check the programs made in the setting mode 2, the number of units being connected, and other entries.

Functions of Pushbutton Switches

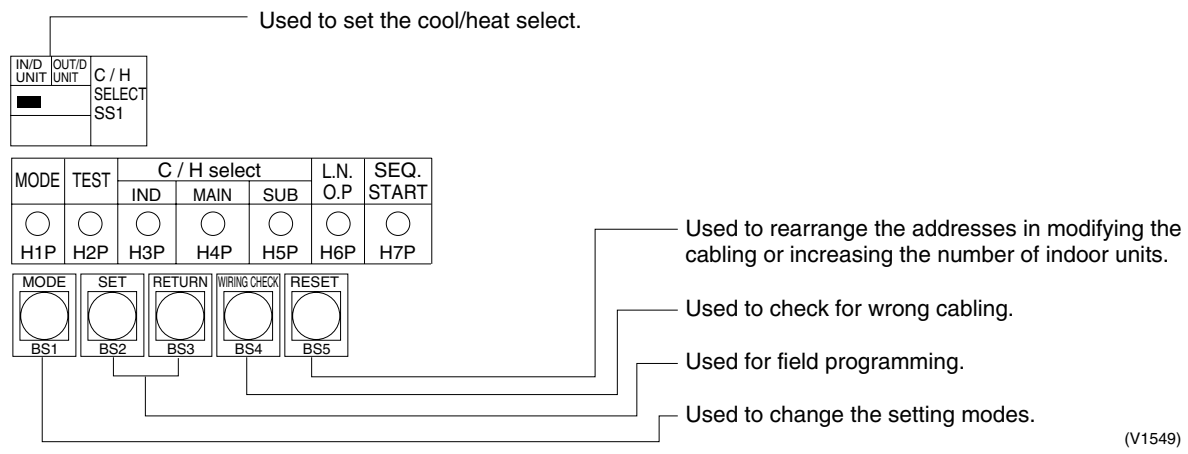

Mode Change

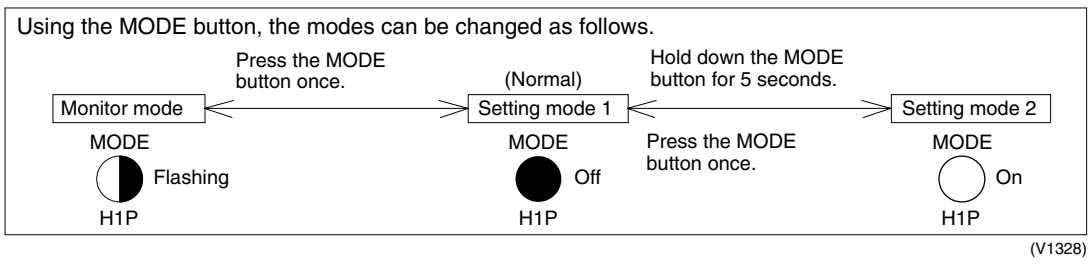

Все каталоги и инструкции здесь: https://splitsystema48.ru/instrukcii-po-ekspluatacii-kondicionerov.html

Si33-102.book Page 66 Tuesday, June 26, 2001 3:18 PM

Mode Changing Procedure

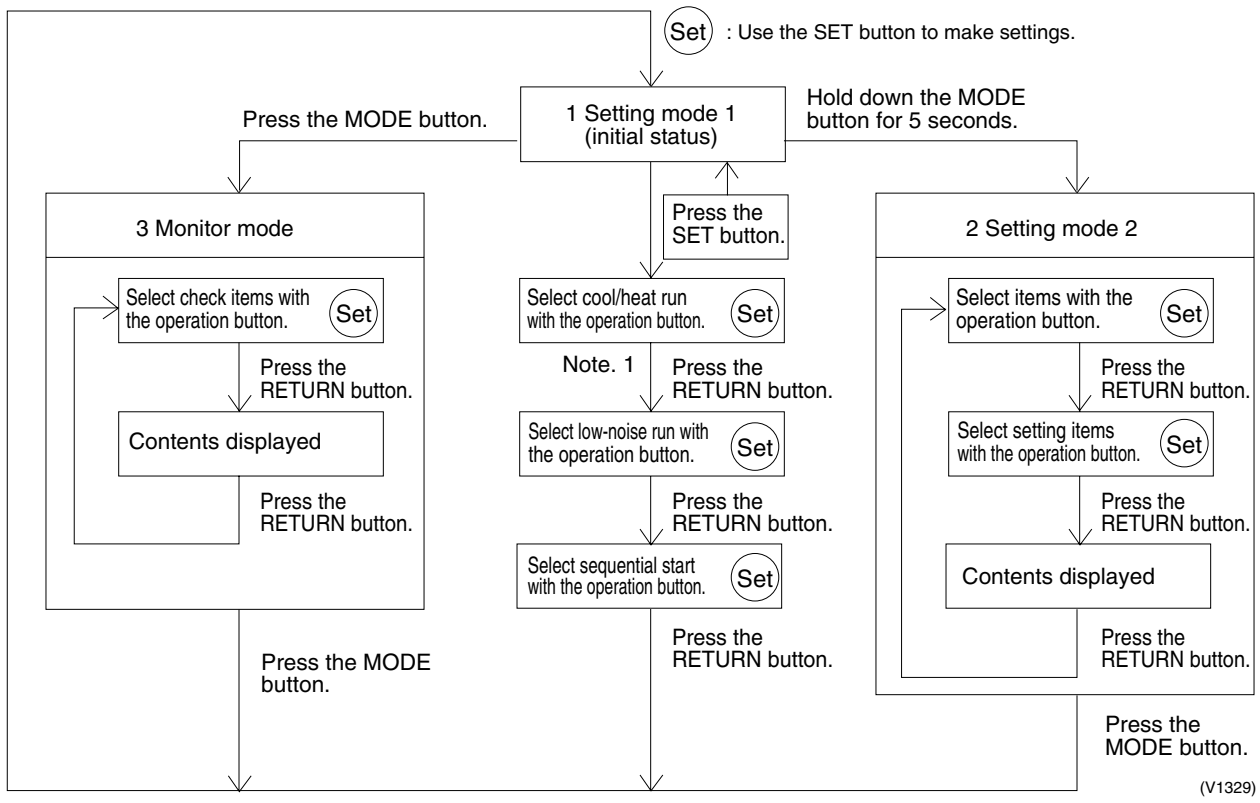

Note:
1. If you become unsure of how to proceed, push the MODE button (BS1) and return to setting mode 1.
2. Power reset is not necessary after setting of setting mode 1 (including C/H select SS1) and setting mode 2.

Все каталоги и инструкции здесь: https://splitsystema48.ru/instrukcii-po-ekspluatacii-kondicionerov.html

Si33-102.book Page 67 Tuesday, June 26, 2001 3:18 PM

4.4.1 Setting Mode 1

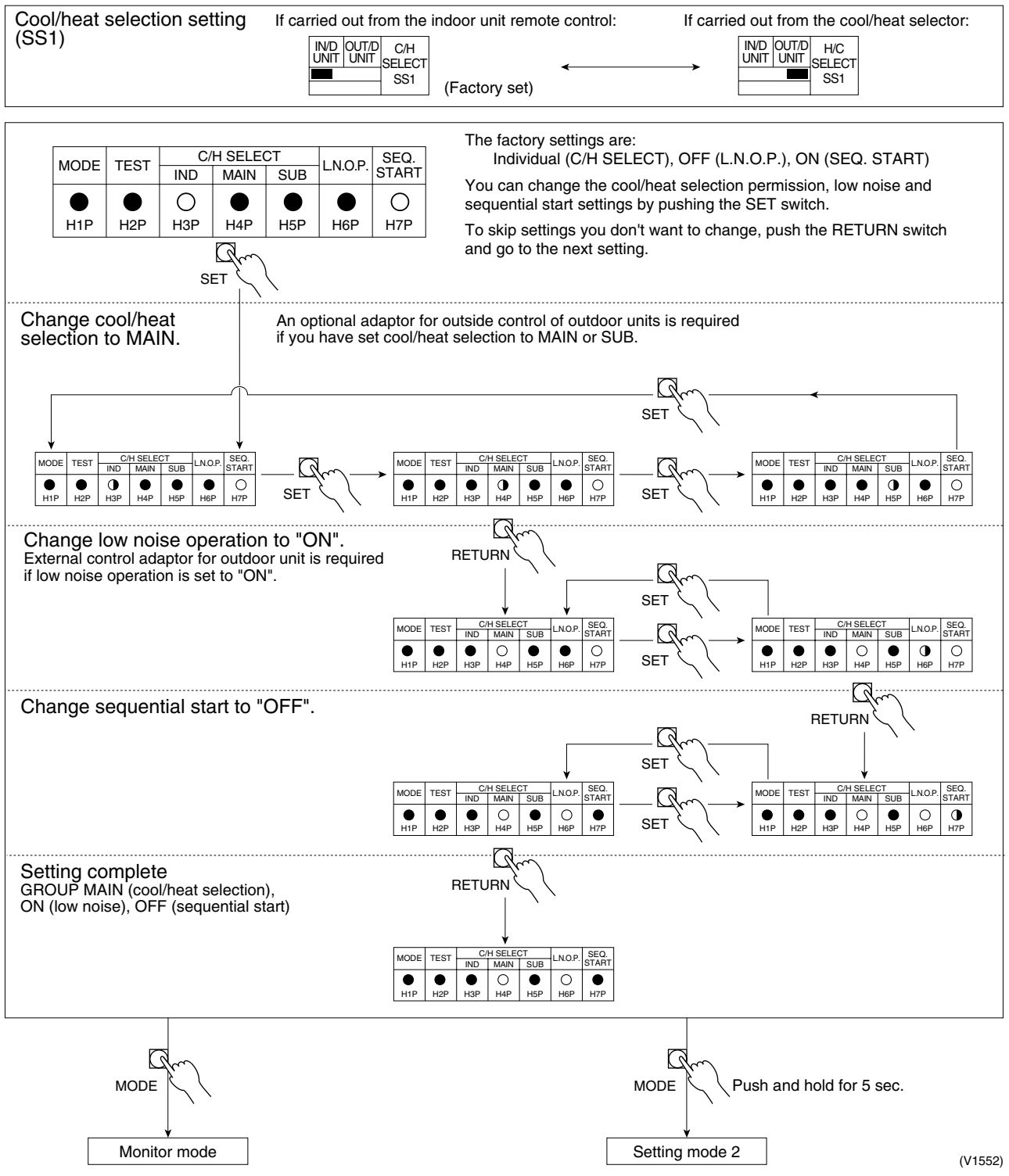

Note: External control adaptor for outdoor unit is required if cool/heat selection set to MAIN or SUB, or if low noise operation is set to ON.

Все каталоги и инструкции здесь: https://splitsystema48.ru/instrukcii-po-ekspluatacii-kondicionerov.html

Si33-102.book Page 68 Tuesday, June 26, 2001 3:18 PM

4.4.2 Setting Mode 2

To switch from setting mode 1 (normal) to setting mode 2, you must push and hold the next page button (BS1) for 5 seconds. (You cannot enter setting mode 2 while setting mode 1 is set.)

Setting Procedure

1. Push the SET button and match with the setting item (LED display). (All 10 settings)
   ↓
2. Push the RETURN button (BS3) and the present settings flicker (LED display).
   ↓
3. Push the SET button (BS2) and match with each setting (LED flicker display).
   ↓
4. Push the RETURN button (BS3) and enter the settings.
   ↓
5. Push the RETURN button (BS3) and return to the initial status.

Note:
1. If you become unsure of how to proceed, push the MODE button (BS1) and return to setting mode 1.
2. The initial status of setting mode 2 is the status of setting item No. 1 in mode 2.

Setting Items

	Setting item	Description	LED display H1P H2P H3P H4P H5P H6P H7P		LED display H1P H2P H3P H4P H5P H6P H7P
1	EMG (Emergency operation 1)	Emergency operation when inverter type outdoor unit malfunctions.	○ ● ● ● ● ● ●	Emergency operation (Operates by constant speed outdoor unit only.)	○ ● ● ● ● ○ ●
				Normal operation	○ ● ● ● ● ● ○
2	Cool/heat unified address	Address for cool/heat unified operation	○ ● ● ● ● ● ○	Address Binary number (5 digits) 0	○ ● ● ● ● ● ●
				1	○ ● ● ● ● ● ○
				2	○ ● ● ● ● ○ ●
				∫	
				31	○ ● ○ ○ ○ ○ ○
3	Low noise / demand address	Address for low noise / demand operation.	○ ● ● ● ● ○ ●	Address Binary number (5 digits) 0	○ ● ● ● ● ● ●
				1	○ ● ● ● ● ● ○
				2	○ ● ● ● ● ○ ●
				∫	
				31	○ ● ○ ○ ○ ○ ○
4	Forced fan switch	Indoor unit fan turns while unit is stopped.	○ ● ● ● ○ ● ○	Forced fan operation (H tap)	○ ● ● ● ● ○ ●
				Normal operation	○ ● ● ● ● ● ○
5	Indoor unit forced operation	Allows operation of indoor unit from outdoor unit.	○ ● ● ● ○ ○ ●	Indoor unit forced operation	○ ● ● ● ● ○ ●
				Normal operation	○ ● ● ● ● ● ○
6	Frequency fix	Fixes compressor frequency. INV : (60Hz+OFF) STD1: (ON+OFF) STD2: (ON+OFF)	○ ● ● ● ○ ○ ○	Frequency fix	○ ● ● ● ● ○ ●
				Normal operation	○ ● ● ● ● ● ○
7	TE setting	Low pressure setting for cooling.	○ ● ● ○ ● ● ●	High	○ ● ● ● ○ ● ●
				Normal (factory set)	○ ● ● ● ● ○ ●
8	TC setting Note 1	High pressure setting for heating	○ ● ● ○ ● ● ○	Low	○ ● ● ● ● ● ○
9	Defrost setting Note 1	Temperature setting for defrost.	○ ● ● ○ ● ○ ●	Quick defrost	○ ● ● ● ○ ● ●
				Normal (factory set)	○ ● ● ● ● ○ ●
				Slow defrost	○ ● ● ● ● ● ○
10	Air NET address	Address for Air NET	○ ● ● ○ ○ ● ○	Address Binary number (6 digits) 0	○ ● ● ● ● ● ●
				1	○ ● ● ● ● ● ○
				2	○ ● ● ● ● ○ ●
				∫	
				63	○ ○ ○ ○ ○ ○ ○

(V0839)

Все каталоги и инструкции здесь: https://splitsystema48.ru/instrukcii-po-ekspluatacii-kondicionerov.html

Si33-102.book Page 69 Tuesday, June 26, 2001 3:18 PM

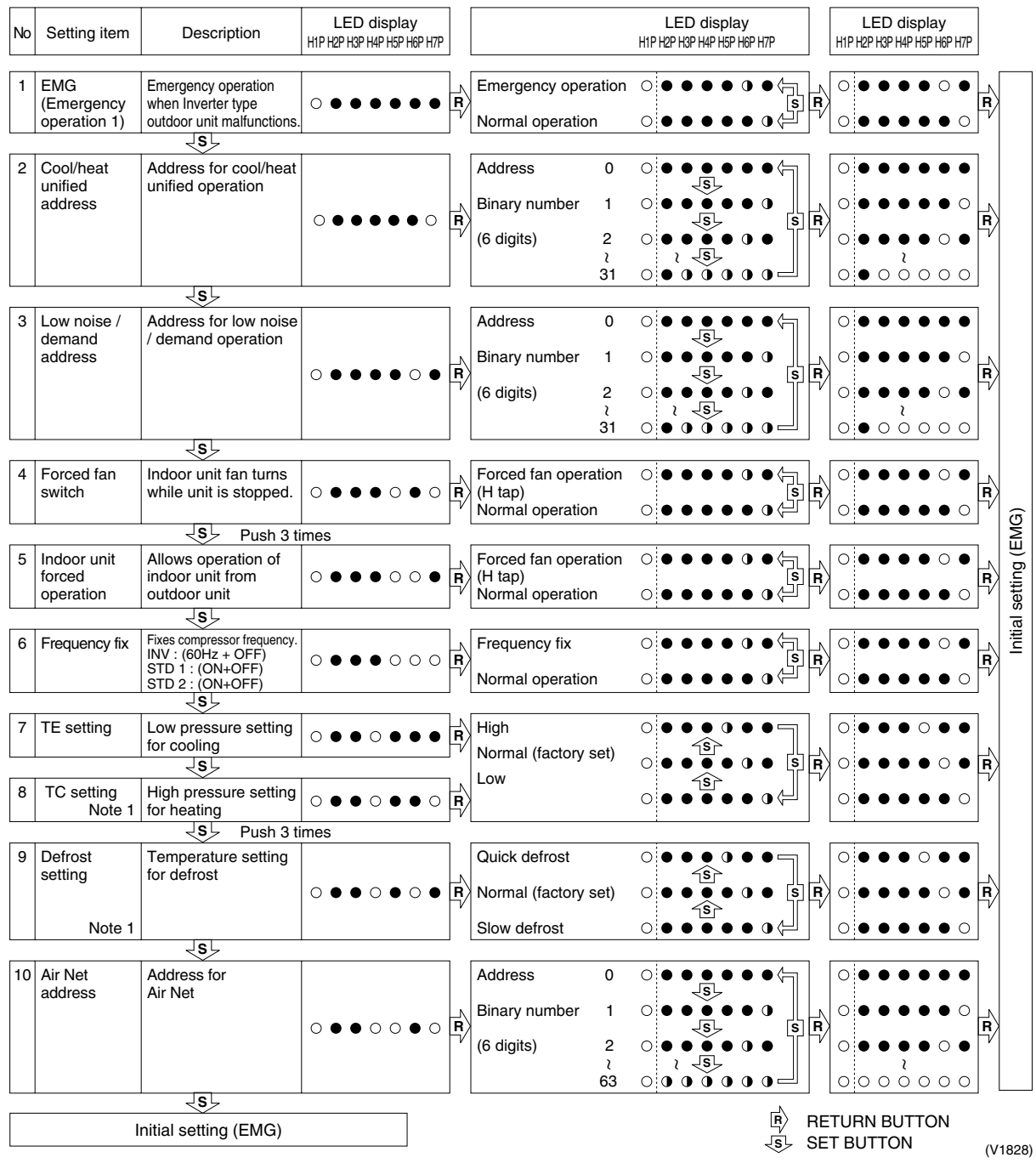

Все каталоги и инструкции здесь: https://splitsystema48.ru/instrukcii-po-ekspluatacii-kondicionerov.html

Si33-102.book Page 70 Tuesday, June 26, 2001 3:18 PM

4.4.3 Monitor Mode

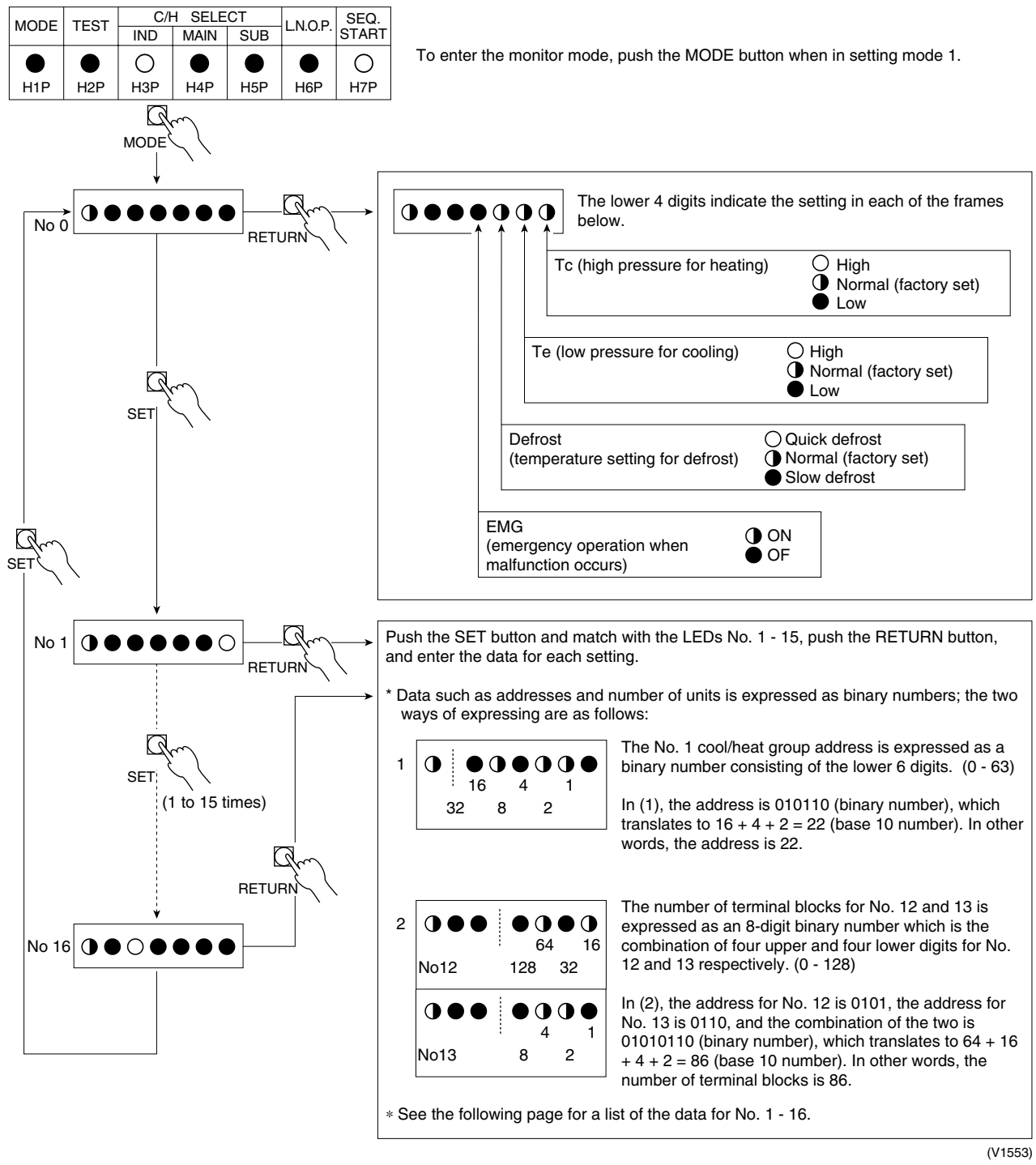

■ **After making sure the data is correct, push the RETURN button and return to No. 0, or push the MODE button and return to setting mode 1.**

Все каталоги и инструкции здесь: https://splitsystema48.ru/instrukcii-po-ekspluatacii-kondicionerov.html

Si33-102.book Page 71 Tuesday, June 26, 2001 3:18 PM

Monitor Mode Data

Mode No.	LED	Data	Display method	Size (binary number)
No 1	○●●●●○	Cool/heat group address	0 ~ 31	Lower 6 digits
No 2	○●●●●○●	Low noise / demand address	0 ~ 31	Lower 6 digits
No 3	○●●●●○○	Not used		
No 4	○●●●○●●	Not used	0 ~ 63	Lower 6 digits
No 5	○●●●○●○	Number of connected units	0 ~ 63 units	Lower 6 digits
No 6	○●●●○○●	Number of connected BS units	0 ~ 63 units	Lower 6 digits
No 7	○●●●○○○	Number of connected zone units (excluding outdoor and BS units)	0 ~ 63 units	Lower 6 digits
No 8	○●●○●●●	Number of outdoor units	0 ~ 63 units	Lower 6 digits
No 9	○●●○●●○	Number of BS units	0 ~ 128 units	Lower 4 digits, upper
No 10	○●●○●○●	Number of BS units	0 ~ 128 units	Lower 4 digits, lower
No 11	○●●○●○○	Number of zone units (excluding outdoor and BS units)	0 ~ 63 units	Lower 6 digits
No 12	○●●○○●●	Number of terminal blocks	0 ~ 128 units	Lower 4 digits, upper
No 13	○●●○○●○	Number of terminal blocks	0 ~ 128 units	Lower 4 digits, lower
No 14	○●●○○○●	Not used		
No 15	○●●○○○○	Not used		
No 16	○●○●●●●	Not used		

Все каталоги и инструкции здесь: https://splitsystema48.ru/instrukcii-po-ekspluatacii-kondicionerov.html

Si33-102.book Page 72 Tuesday, June 26, 2001 3:18 PM

4.5 Cool/Heat Mode Selection

The R-22 VRV PLUS Series offers the following four cool/heat mode selections.

1. Setting of cool/heat by individual outdoor unit system by indoor unit remote control
2. Setting of cool/heat by individual outdoor unit system by cool/heat selector
3. Setting of cool/heat by outdoor unit system group in accordance with group master outdoor unit by indoor unit remote control
4. Setting of cool/heat by outdoor unit system group in accordance with group master outdoor unit by cool/heat selector

Each of these setting methods is explained in detail below.
(For **3** and **4** be sure to perform power supply reset after changing settings.)

4.5.1 Setting of Cool / Heat by Individual Outdoor Unit System by Indoor Unit Remote Control

- Doesn't matter whether or not there is outdoor - outdoor unit wiring.
- Set SS1 of the outdoor unit PCB to "IN / D UNIT" (factory set).
- In setting mode 1, set cool/heat selection to "IND" (factory set).

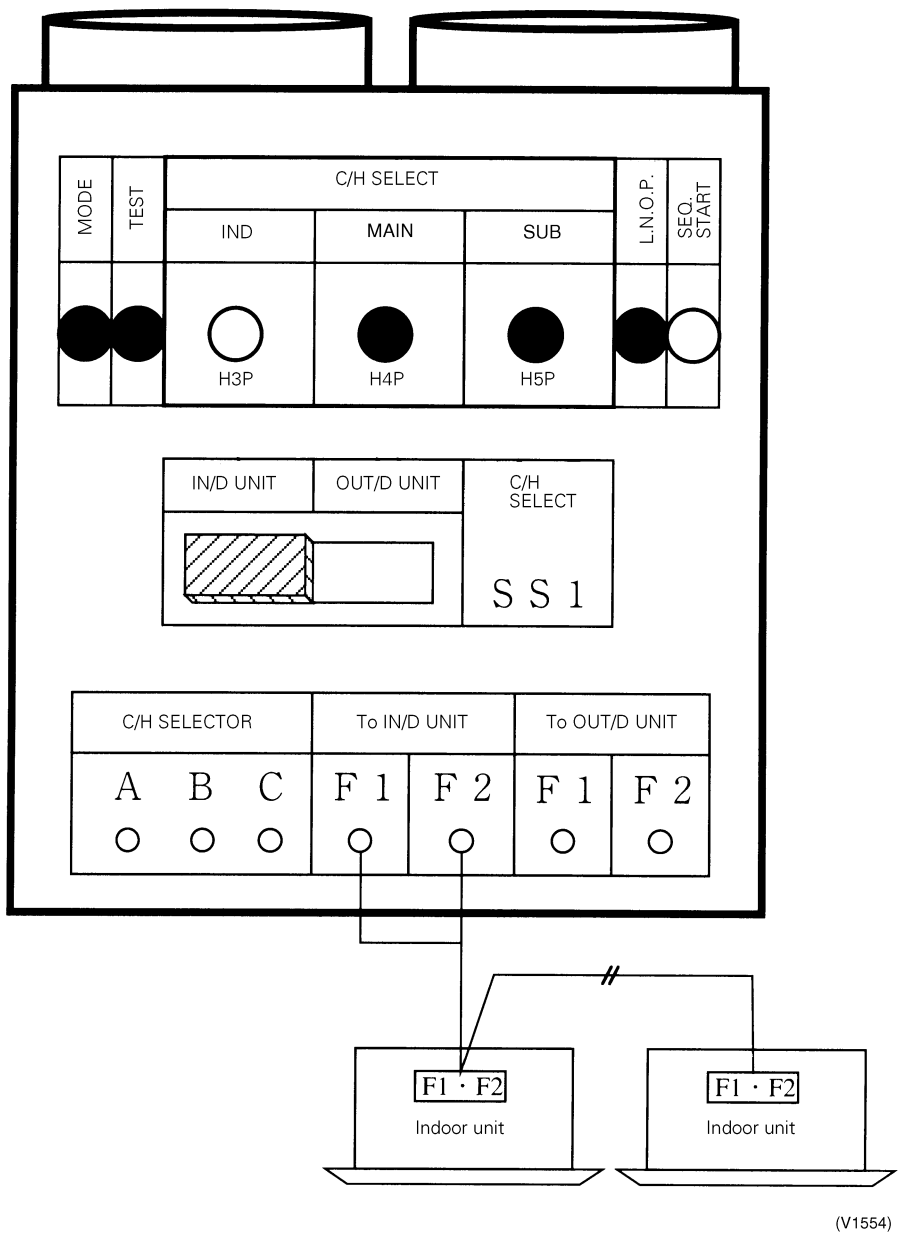

Все каталоги и инструкции здесь: https://splitsystema48.ru/instrukcii-po-ekspluatacii-kondicionerov.html

Si33-102.book Page 73 Tuesday, June 26, 2001 3:18 PM

4.5.2 Setting of Cool / Heat by Individual Outdoor Unit System by Cool/Heat Selector

- Doesn't matter whether or not there is outdoor - outdoor unit wiring.
- Set SS1 of the outdoor unit PC board to "OUT / D UNIT."
- In setting mode 1, set cool/heat selection to "IND" (factory set).

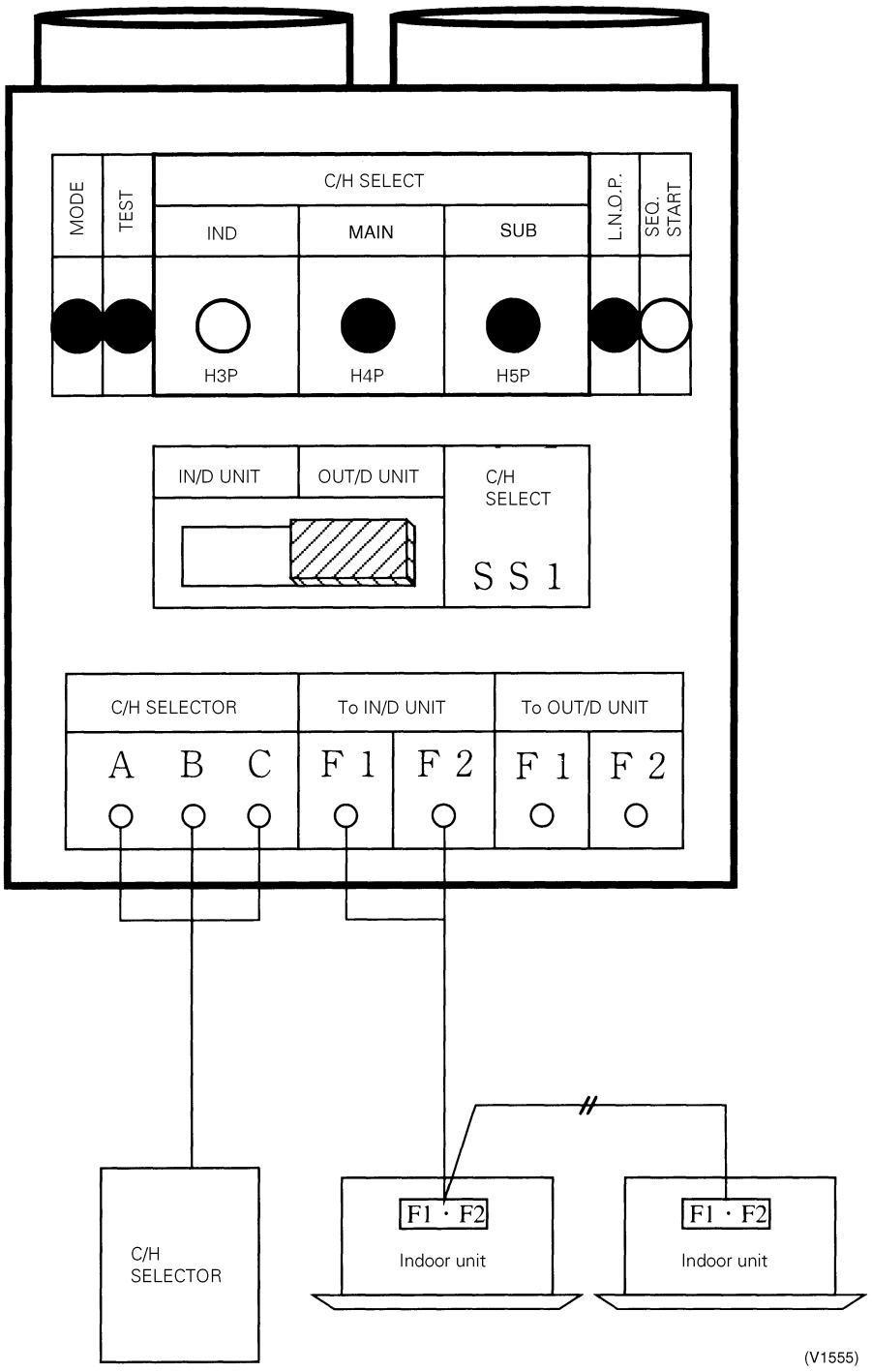

Все каталоги и инструкции здесь: https://splitsystema48.ru/instrukcii-po-ekspluatacii-kondicionerov.html

Si33-102.book Page 74 Tuesday, June 26, 2001 3:18 PM

4.5.3 Setting of Cool / Heat by Outdoor Unit System Group in Accordance with Group Main Outdoor Unit by Indoor Unit Remote Control

- Install the External control adaptor for outdoor unit on either the outdoor - outdoor, indoor - outdoor, or indoor - indoor transmission line.
- Set SS1 of the outdoor unit PCB to “IN / D UNIT” (factory set).
- In setting mode 1, set the outdoor unit you want to give cool/heat selection permission to as the group main, and set the other outdoor units as group sub units.
- Set SS1 of the External control adaptor for outdoor unit to “BOTH” (factory set) or “C / H.” Set SS2 to “OFF” (factory set).

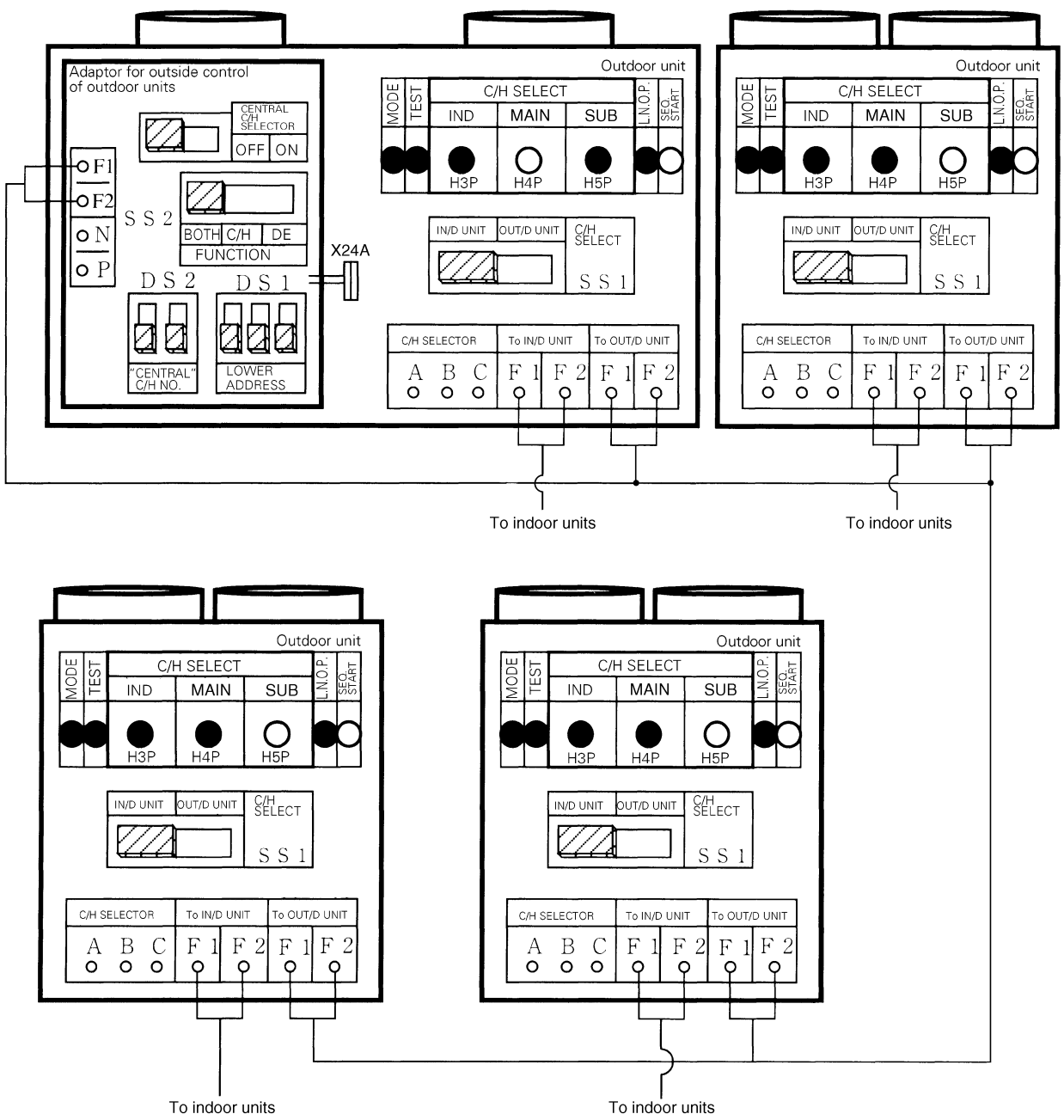

4.5.4 Setting of Cool / Heat by Outdoor Unit System Group in Accordance with Group Main Outdoor Unit by Cool/Heat Selector

- In addition to **1.5.3**, change the following:
- Install a cool / heat selector to the group main outdoor unit.
- Set SS1 of the group main outdoor unit’s PCB to “OUT / D UNIT.”

Все каталоги и инструкции здесь: https://splitsystema48.ru/instrukcii-po-ekspluatacii-kondicionerov.html

Si33-102.book Page 75 Tuesday, June 26, 2001 3:18 PM

Supplement

■ Supplement to **1.5.3** and **1.5.4**

If using several adaptor PCB and you want to select cool/heat mode for each adaptor PCB, set DS1 / DS2 of the adaptor PCB and the cool/heat group address on the outside unit's PCB to the same setting in setting mode 2.

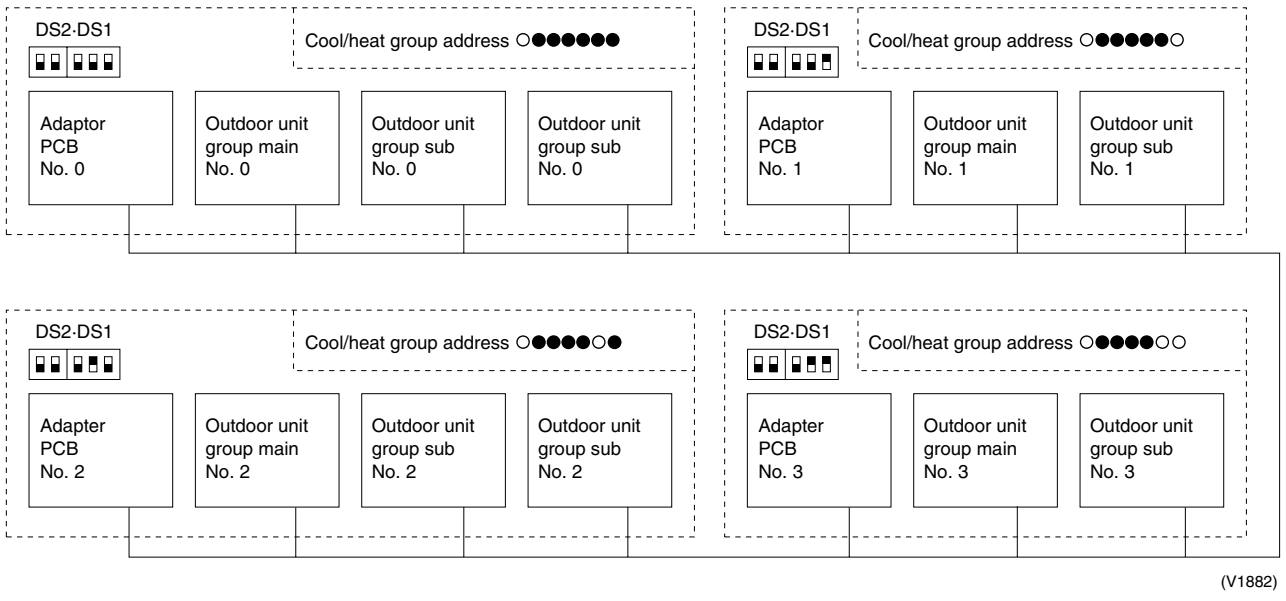

Все каталоги и инструкции здесь: https://splitsystema48.ru/instrukcii-po-ekspluatacii-kondicionerov.html

Si33-102.book Page 76 Tuesday, June 26, 2001 3:18 PM

Setting Method

1.5.3 and **1.5.4** address setting method (combine lower 5 digits as binary number)

Address No.	Outdoor unit PC board LED Set in setting mode 2	PC board adaptor DS2 DS1
No 0	○● ●●●●● 0	0
No 1	○● ●●●●○ 1	1
No 2	○● ●●●○● 2	2
No 3	○● ●●●○○ 3	3
No 4	○● ●●○●● 4	4
~	~	~
No30	○● ○○○○● 30	30
No31	○● ○○○○○ 31	31

○ On ● Off

Up (ON) Down (OFF)

(The black part represents the switch.)

(V1335)

Все каталоги и инструкции здесь: https://splitsystema48.ru/instrukcii-po-ekspluatacii-kondicionerov.html

Si33-102.book Page 77 Tuesday, June 26, 2001 3:18 PM

4.6 Low Noise Operation

By connecting the external contact input to the low noise input of the outdoor unit external control adaptor for outdoor unit (optional), you can save power and lower operating noise by 2 -3 dB.

Instructions for Demand Control Operation

1. Outdoor unit field setting

◆ Setting mode 1: Set low noise operation to “ON.”

◆ Setting mode 2: Match low noise operation and demand control address with address of outdoor unit external control adaptor.

2. Outdoor unit external control adaptor setting

◆ Function switch (SS1)

Set to “BOTH” or “DE.”

◆ Address setting switches (DS1, DS2)

Match with outdoor unit low noise operation and demand control address.

3. Short-circuit the low noise input of outdoor unit external control adaptor for outdoor unit.

Low Noise Control System Example

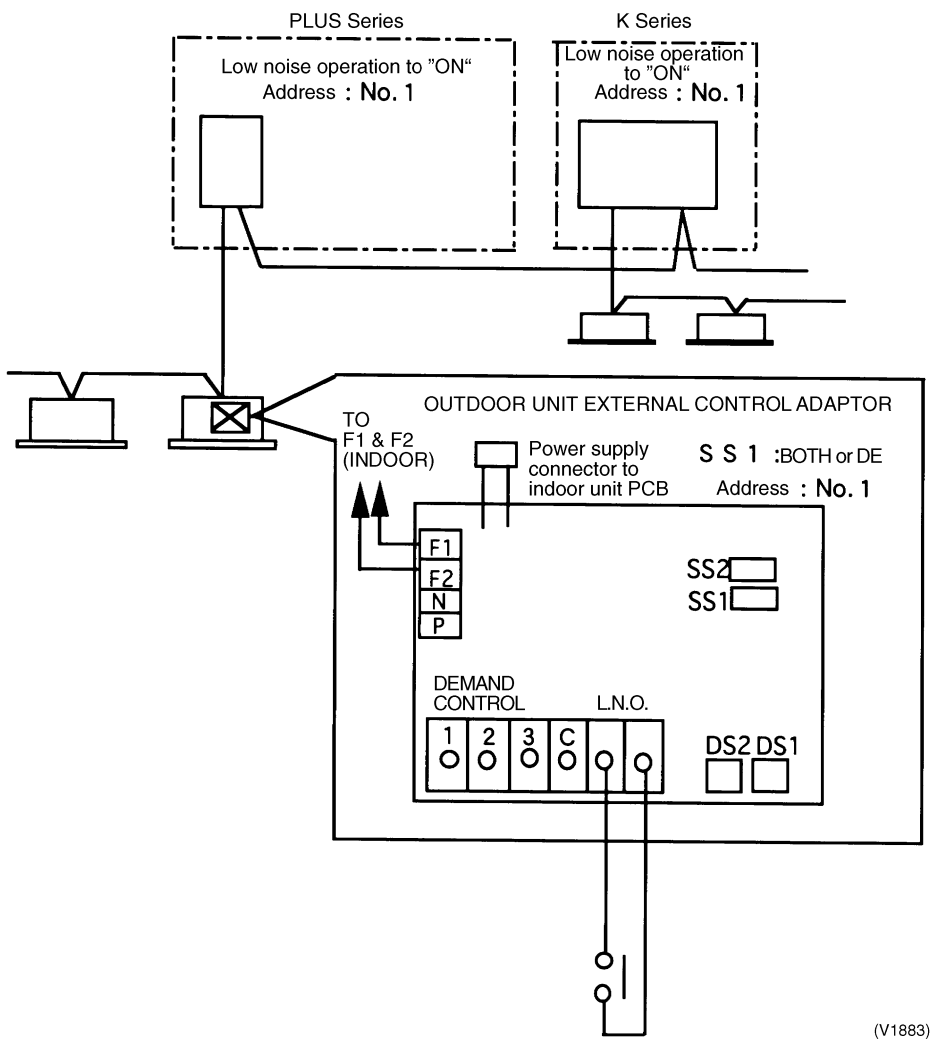

Все каталоги и инструкции здесь: https://splitsystema48.ru/instrukcii-po-ekspluatacii-kondicionerov.html

Si33-102.book Page 78 Tuesday, June 26, 2001 3:18 PM

4.7 Demand Control

By connecting the external contact input to the demand input of the outdoor unit external control adaptor (option), the compressor operating conditions can be controlled for reduced power consumption.

- Demand 1 Approximately 70% level
- Demand 2 Approximately 40% level
- Demand 3 Forced thermostat OFF

Instructions for Demand Control Operation

1. Outdoor unit field setting

◆ Setting mode 1: Set low noise operation to “ON.”

◆ Setting mode 2: Match low noise operation and demand control address with address of outdoor unit external control adaptor.

2. Outdoor unit external control adaptor setting

◆ Function switch (SS1)

Set to “BOTH” or “DE.”

◆ Address setting switches (DS1, DS2)

Match with outdoor unit low noise operation and demand control address.

3. Select one from demand input terminals 1 through 3 on the outdoor unit external control adaptor, and short the corresponding terminals.

- Demand 1 Short 1-C.
- Demand 2 Short 2-C.
- Demand 3 Short 3-C.

Demand Control System Example

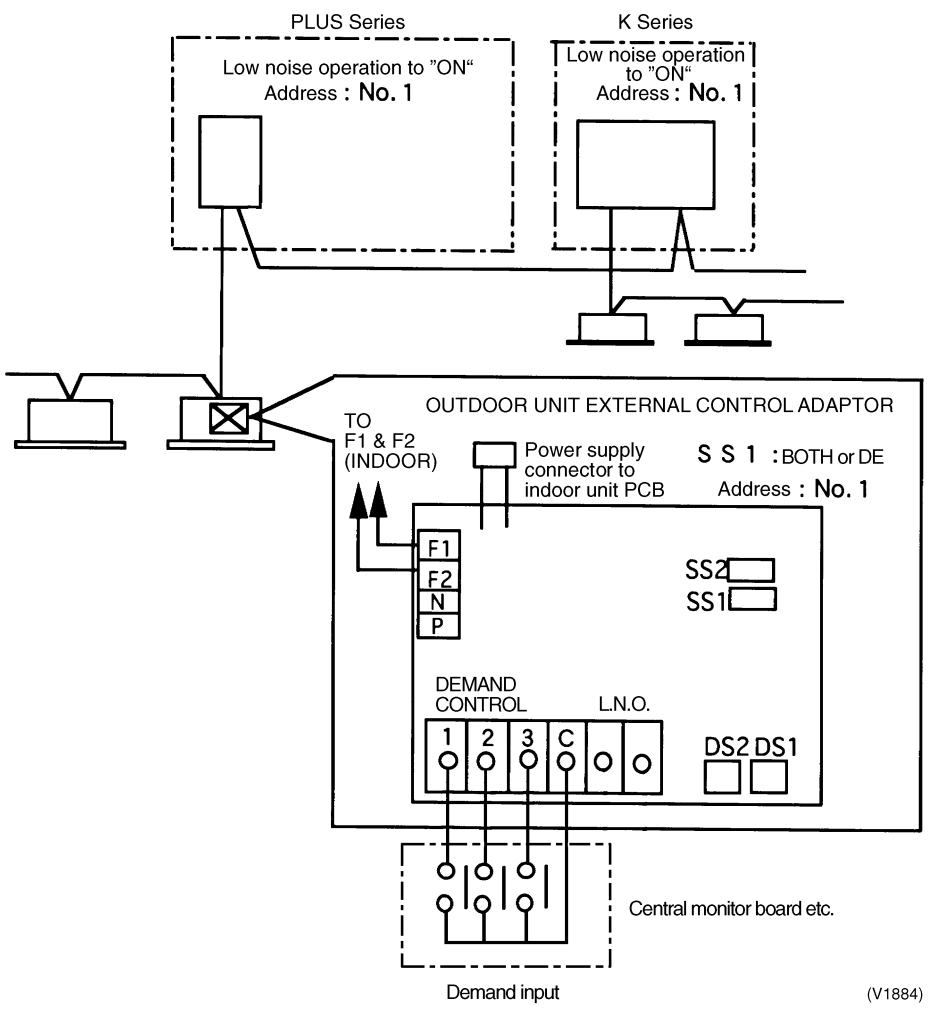

Все каталоги и инструкции здесь: https://splitsystema48.ru/instrukcii-po-ekspluatacii-kondicionerov.html

Si33-102.book Page 79 Tuesday, June 26, 2001 3:18 PM

4.8 Sequential Start

- Separates path timing of commercial power supply compressors by 3 seconds each in order to prevent overcurrent when more than 1 compressor are to be started at the same time.
- Improved wiring system enables sequential start of up to 10 outdoor units.

If you want to carry out sequential start, connect outdoor unit - outdoor unit transmission wiring as shown below.
The outdoor unit PC board (EC) is factory set to “sequential start ON.”

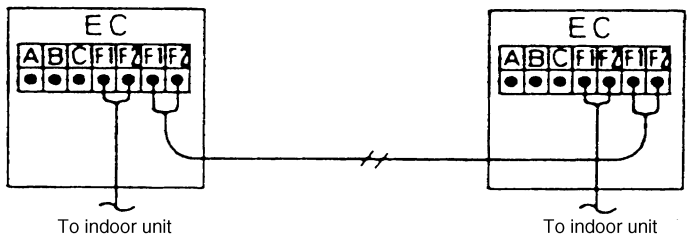

(V1885)

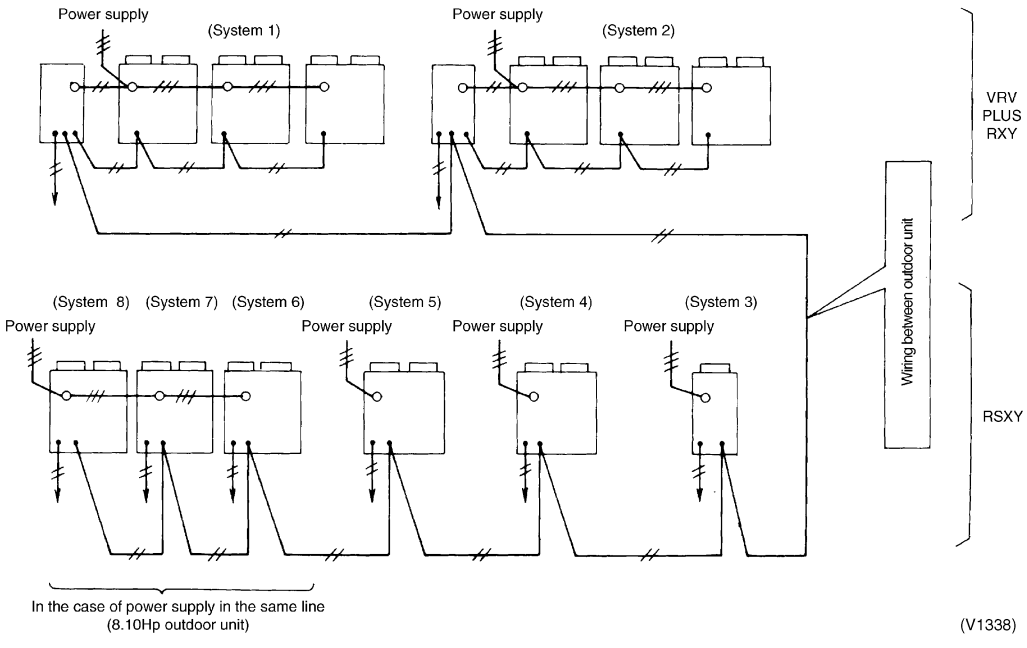

(V1338)

Все каталоги и инструкции здесь: https://splitsystema48.ru/instrukcii-po-ekspluatacii-kondicionerov.html

Si33-102.book Page 80 Tuesday, June 26, 2001 3:18 PM

4.9 Wiring Check Operation

If within 12 hours of stopping cooling or heating, be sure to run all indoor units in the system you want to check in the fan mode for about 60 minutes in order to prevent mis-detection.

Operation Method

1. In the monitor mode, check the number of connected indoor units. (See monitor mode.)
2. Push and hold the WIRING CHECK button (BS4) for 5 seconds to perform wiring check operation. While running, TEST (H2P) lights and goes off when finished.
   If TEST (H2P) flickers (wiring check operation failure), push and hold the RESET button (BS5) for 5 seconds, and then repeat the procedure from the beginning.
3. About 1 minute after you finish running the system, once again check the number of connected indoor units in the monitor mode and make sure the number agrees with the first time you checked. If not, it indicates that there is a wiring mistake. Fix the wiring of the indoor unit whose remote control displays "UF" when its ON/OFF switch is turned ON.

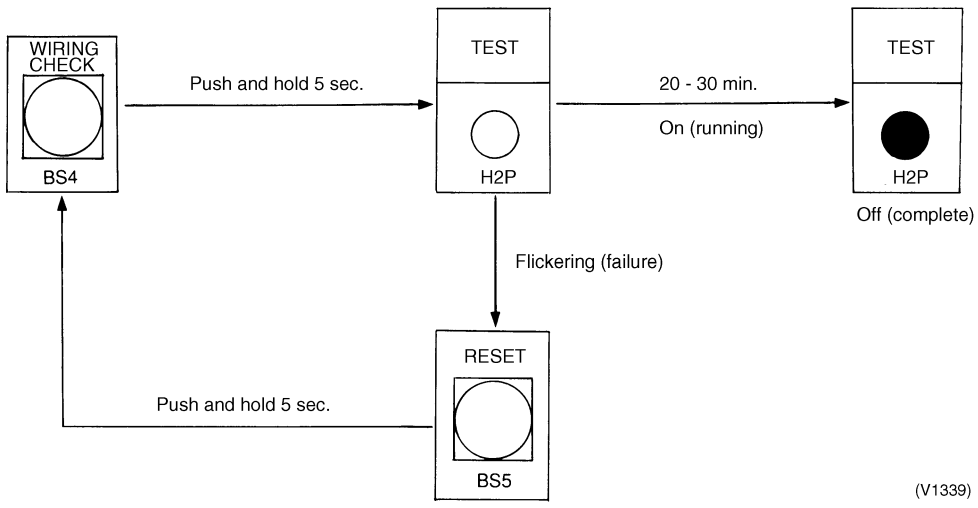

Note: Other settings are not accepted during wiring check operation.

Все каталоги и инструкции здесь: https://splitsystema48.ru/instrukcii-po-ekspluatacii-kondicionerov.html

Si33-102.book Page 81 Tuesday, June 26, 2001 3:18 PM

4.10 Additional Refrigerant Charge Operation

[Work procedure]

1. Conduct ordinary refrigerant charge.
   With the outdoor unit in non-operating condition, charge refrigerant from the liquid-side stop valve service port.
   (Keep the stop valves on both liquid and gas sides closed.)

■ **Conduct the following operation only when the entire amount of refrigerant could not be charged with the compressor in non-operating condition (otherwise equipment damage can result).**

2. Turn on the power switches of the indoor and outdoor units, and fully open the gas-side stop valve.
   (Keep the liquid-side stop valve closed.)

3. Set the service mode.

In service mode 1, press the “MODE” button for 5 seconds to enter service mode 2.		○	●	●	●	●	●	●
Press the “SET” button to set the LED indicators to the "additional refrigerant charge operation" indication.		○	●	○	●	○	●	●
Press the “RETURN” button.		○	●	●	●	●	●	◑
Press the “SET” button to set the LED indicators as shown at right.		○	●	●	●	●	◑	●
Press the “RETURN” button to end the setting operation.		○	●	●	●	●	○	●
Press the “RETURN” button again to start operation.		◑	◑	●	●	●	●	●
Low pressure level is indicated during operation.	Higher than 3.5k	○	○	○	○	○	○	○
	3.5k or less	○	○	●	●	○	○	○
	2.5k or less	○	○	●	●	●	○	○
	1.5k or less	○	○	●	●	●	●	○
Operation ends (after 30 minutes). (Pressure level immediately before is indicated by flashing LEDs.)		○	○	●	●	●	◑	◑
		This LED indication shows that the operation stopped with pressure level at [2.5 k or lower].						
Push “Mode” button once to complete aditional refrigerant change.		○	●	●	●	●	○	●

4. The refrigerant charge is completed when the specified amount of refrigerant is added. If the refrigerant charge operation is not completed in 30 minutes, make the settings again and restart the operation.
   (When the Confirmation button is pressed during additional refrigerant charge operation, the operation stops.)

5. Disconnect the refrigerant charge hose, then fully open the liquid-side stop valve.

Все каталоги и инструкции здесь: https://splitsystema48.ru/instrukcii-po-ekspluatacii-kondicionerov.html

Si33-102.book Page 82 Tuesday, June 26, 2001 3:18 PM

4.11 Refrigerant Recovery Mode

■ **The electronic expansion valves in the indoor and outdoor units are fixed in the fully open position for refrigerant recovery.**

[Work procedure]

1. Stop equipment operation.

2. Set the service mode.

In service mode 1, press the “MODE” button for 5 seconds to enter service mode 2.	○	●	●	●	●	●	●
Press the “SET” button to set the LED indicators to the "refrigerant recovery mode" indication.	○	●	○	●	○	●	○
Press the “RETURN” button.	○	●	●	●	●	●	◑
Press the “SET” button to set the LED indicators as shown at right.	○	●	●	●	●	◑	●
Press the “RETURN” button to end the setting operation.	○	●	●	●	●	○	●

3. Turn off the power switches of the indoor and outdoor units.
   (Turn off the power switch of one unit, then turn off the power switch of the other unit within 10 minutes.)

4. Conduct refrigerant recovery.

5.

Press the “RETURN” button again to return to initial status.	○	●	●	●	●	●	●

■ Cancel the setting in the setting mode or cancel the mode by conducting power reset of the outdoor unit.

Все каталоги и инструкции здесь: https://splitsystema48.ru/instrukcii-po-ekspluatacii-kondicionerov.html

Si33-102.book Page 83 Tuesday, June 26, 2001 3:18 PM

4.12 Indoor Field Setting

Making a field setting

Field settings must be made by remote control if optional accessories have been installed on the indoor unit, or if the indoor unit or HRV unit's individual functions have been modified.

4.12.1 Wired Remote Control <BRC1A61(51)>

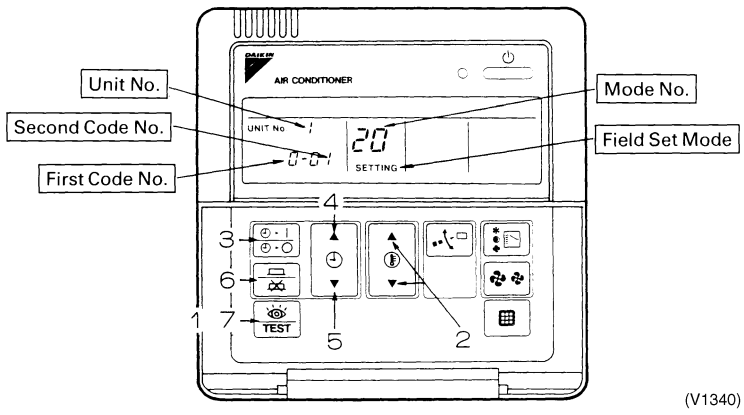

(V1340)

1. When in the normal mode, push the TEST button for 4 seconds or more, and operation then enters the "field set mode."
2. Select the desired "mode No." with the button.
3. During group control and you want to set by each individual indoor unit (when mode No. 20, 21, 22, 23, 25 has been selected), push the time mode button and select the "indoor unit No." to be set.
   Note: This operation is not required when setting as a group.
4. Push the button and select the first code No.
5. Push the button and select the second code No.
6. Push the timer button one time and "define" the currently set contents.
7. Push the TEST button to return to the normal mode.

(Example)

When setting the filter sign time to "Filter Dirtiness-High" in all group unit setting, set the Mode No. to "10", Mode setting No. to "0" and setting position No. to "02".

Все каталоги и инструкции здесь: https://splitsystema48.ru/instrukcii-po-ekspluatacii-kondicionerov.html

Si33-102.book Page 84 Tuesday, June 26, 2001 3:18 PM

4.12.2 Wired Remote Control – Heat Recovery Ventilation <BRC301B61>

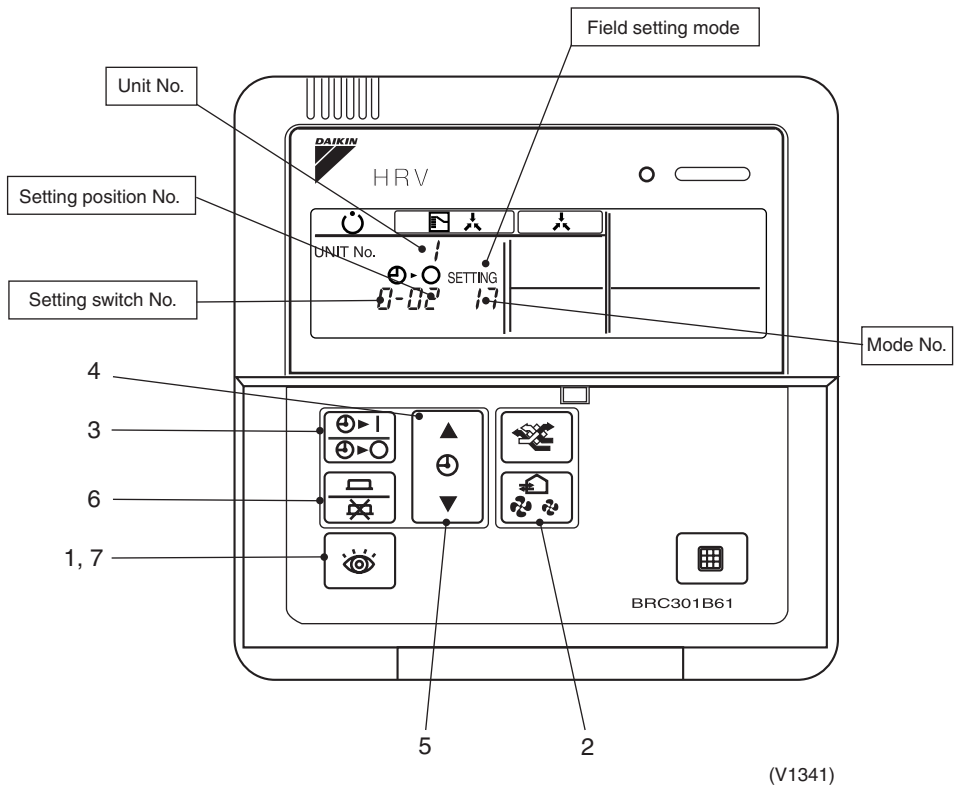

Setting procedure

1. In the Normal Mode, press the button for more than 4 seconds to enter the Local Setting mode.
2. Using the (Mode No. UP) and [Ventilation Volume] (Mode No. DOWN) buttons to select a desired Mode No.
3. To set individual Heat Recraim Ventilation units in group control (select Mode Nos. 27 and 28 (Heat Recraim Ventilation)), press the button and choose the Unit No. to set. (This step is not necessary in all group unit setting.)
4. Press the UP button to select a Setting Switch No.
5. Press the DOWN button to select a Setting Position No.
6. Press the button once to enter the settings.
7. Depress the button for about 1 second to return to the Normal Mode.

(Example)

When setting the filter sign time to "Filter Dirtiness - High" in all group unit setting, set the Mode No. to "17," Mode Setting No. to "0" and Setting Position No. to "02."

Все каталоги и инструкции здесь: https://splitsystema48.ru/instrukcii-po-ekspluatacii-kondicionerov.html

Si33-102.book Page 85 Tuesday, June 26, 2001 3:18 PM

4.12.3 Infrared Remote — Indoor Unit

BRC7A Type

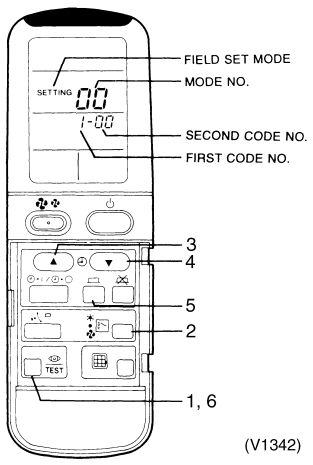

1. When in the normal mode, push the TEST button for 4 seconds or more, and operation then enters the “field set mode.”
2. Select the desired “mode No.” with the button.
3. Pushing the button, select the first code No.
4. Pushing the button, select the second code No.
5. Push the timer button and check the settings.
6. Push the TEST button to return to the normal mode.

BRC7C (4C) Type (BRC4C Type : without auto swing)

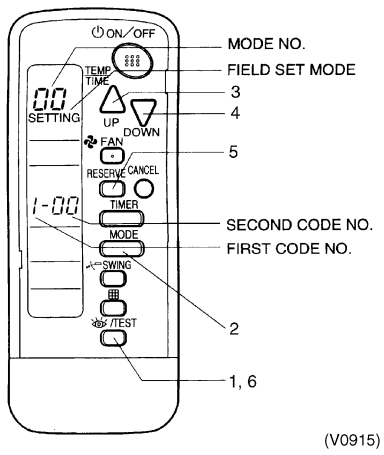

1. When in the normal mode, push the /TEST button for 4 seconds or more, and operation then enters the “field set mode.”
2. Select the desired “mode No.” with the MODE button.
3. Pushing the UP button, select the first code No.
4. Pushing the DOWN button, select the second code No.
5. Push the timer RESERVE button and check the settings.
6. Push the /TEST button to return to the normal mode.

Все каталоги и инструкции здесь: https://splitsystema48.ru/instrukcii-po-ekspluatacii-kondicionerov.html

Si33-102.book Page 86 Tuesday, June 26, 2001 3:18 PM

4.12.4 Setting Contents and Code No. – VRV Unit

Mode No. Note)1	FIRST CODE No.	Description of Setting		SECOND CODE NO. Note)2			
				01	02	03	04
10(20)	0	Filter Contamination-Heavy/ Light (Setting for display time to clean air filter) (Sets display time to clean air filter to half when there is heavy filter contamination.)	Ultra-Long-Life Type	Light: Approx. 10,000 hours	Heavy: Approx. 5,000 hours	—	—
			Long-Life Type	Light: Approx. 2,500 hours	Heavy: Approx. 1,250 hours		
			Standard Type	Light: Approx. 200 hours	Heavy: Approx. 100 hours		
	1	Long-life filter type (Setting of filter sign indication time) (Change setting when Ultra-long-life filter is installed)		Long-Life Filter	Ultra-Long-Life Filter	—	—
	2	Thermostat Sensor in Remote Control		Use	Not Use	—	—
	3	Display Time to Clean Air Filter Calculation (Set when filter sign is not to be displayed)		Display	Do not Display	—	—
12(22)	0	Optional accessories output selection (field selection of output for adaptor for wiring)		Indoor Unit Turned ON by Thermostat	—	Operation Output	Malfunction Output
	1	ON/OFF Input from Outside (Set when ON/OFF is to be controlled from outside.)		Forced Off	ON/OFF Control	External Protection Device	—
	2	Thermostat Differential Changeover (Set when remote sensor is to be used.) FXYC, FXYF, FXYK, FXYH only		1˚C	0.5˚C	—	—
	4	Automatic mode differential (automatic temperature differential setting for VRV system heat recovery series cool/heat)		01 : 0 / 02 : 1	03 : 2 / 04 : 3	05 : 4 / 06 : 5	07 : 6 / 08 : 7
	5	Power failure automatic reset (Auto Restart)		No equipped	Equipped	—	—
13(23)	0	High Air Outlet Velocity (Set when installed in a place with ceiling higher than 2.7m.)		N	H	—	—
	1	Selection of Air Flow Direction (Set when a blocking pad kit has been installed) FXYF only		F (4 directions)	T (3 directions)	W (2 directions)	—
	3	Air Flow Direction Adjustment (Set at installation of decoration panel.) FXYK only		Equipped	Not Equipped	—	—
	4	Field set air flow position setting		Draft Prevention	Standard	Ceiling Soiling Prevention	—
	5	Field set fan speed selection (fan speed control by air discharge outlet for phase control)		Standard	Optional Accessory 1	Optional Accessory 2	—
15(25)	1	Humidifying with thermostat OFF		Not Equipped	Equipped	—	—
	3	Drain Pump humidifier interlock selection		Not Equipped	Equipped	—	—

Notes:
1. Setting is carried out in the group mode. however, if the mode number inside the parentheses is selected, indoor units can also be set individually.
2. The SECOND CODE number. is set to " ▭ " when shipped from the factory.
3. Do not make any settings not given in the table above.
4. Not displayed if the indoor unit is not equipped with that function.
5. When returning to the normal mode. "88" may be displayed in the LCD in order for the remote control to initialize itself.

Все каталоги и инструкции здесь: https://splitsystema48.ru/instrukcii-po-ekspluatacii-kondicionerov.html

Si33-102.book Page 87 Tuesday, June 26, 2001 3:18 PM

4.12.5 Field Setting, Service Mode – Heat Recovery Ventilation (HRV)

1. Field setting
   Used for initial setting of heat recovery ventilation unit.
2. Service mode
   Used for confirmation of unit Nos. in the group and reallocation of unit Nos.

List of Field Setting and Service Mode

Heat Recovery Ventilation (HRV)	Mode No.	Setting switch No.	Setting contents	Setting position					
				01	02	03	04	05	06
	17(27)	0	Filter cleaning time setting	Approx. 2500 hr.	Approx. 1250 hr.	No counting	—	—	—
		2	Pre-cool/pre-heat On/Off setting	Off	On	—	—	—	—
		3	Pre-cool/pre-heat time (min.) setting	30 min.	45 min.	60 min.		—	—
		4	Fan speed initial setting	Normal	Ultra-High	—	—	—	—
		5	Yes / No setting for direct duct Connection with VRV system	No duct (Air flow setting)	With duct (fan off)	—	—	—	—
			Setting for cold areas (Fan operaiton selection for heater thermostat OFF)	—	—	No duct		With duct	
						Fan off	Fan L	Fan off	Fan L
		7	Centralized / individual setting	Centralized	Individual	—	—	—	—
		8	Centralized zone interlock setting	No	Yes	Priority on Operation	—	—	—
		9	Pre-heat time extension setting	0	30 min.	60 min.	90 min.	—	—
	18(28)	0	External signal setting JC / J2	Last command	Priority on external input	—	—	—	—
		1	Setting for direct power-on	Off	On	—	—	—	—
		2	Auto restart setting	Off	On	—	—	—	—
		4	Indication of ventilation mode / Not indication	Indication	No Indication	—	—	—	—
		7	Fresh up air supply / exhaust setting	No Indication	No Indication	Indication	Indication	—	—
				Supply	Exhaust	Supply	Exhaust	—	—
		8	External input terminal function selection (between J1 and JC)	Fresh up	Overall alarm	Overall malfunction	Forced off	Fan forced off	Air flow increase
		9	KRP50-2 output switching selection (between 1 and 3)	Humidify	Abnormal	Fan on / off	—	—	—
	19(29)	0	Air flow setting	Low	Low	Low	Low	High	High
		2	Ventilation mode setting	Automatic	Total heat exchange	Normal	—	—	—
		3	Fresh up operation	OFF	ON	—	—	—	—
		8	Electric heater setting	No delay	No delay	ON / OFF Delay	ON / OFF Delay	—	—

Все каталоги и инструкции здесь: https://splitsystema48.ru/instrukcii-po-ekspluatacii-kondicionerov.html

Si33-102.book Page 88 Tuesday, June 26, 2001 3:18 PM

Note:

1. All the setting can be made by the remote control for VRV and HRV unit.
   The setting of mode No. 19 (29) and 40 can be made only by the remote control for VRV unit. The mode No. 30 is used for the individual setting such as the calculation of power bill, etc.
2. The mode No. in ( ) is used for making individual setting of each unit.
3. **Group number setting for centralized control**
   1. Mode no. 00: Group control
   2. Mode no. 30: Individual control
   ∗ Regarding the setting procedure, refer to the section “Group number setting for centralized control” in the operating manual of either the on / off control or the central control.

Caution

1. The setting positions are set at “01” at the factory.
   The ventilation air flow, however, is set at “05” (medium) in the HRV unit. When lower or higher setting is desired, change the setting after installation.

Все каталоги и инструкции здесь: https://splitsystema48.ru/instrukcii-po-ekspluatacii-kondicionerov.html

Si33-102.book Page 89 Tuesday, June 26, 2001 3:18 PM

4.13 Centralized Control Group No. Setting

BRC1A51·52

- If carrying out centralized control by central remote control or unified ON/OFF control, group No. must be set for each group individually by remote control.
- Group No. setting by remote control for centralized control

1. When in the normal mode, push the TEST button for 4 seconds or more, and operation then enters the "field setting mode."
2. Set mode No. "00" with the button. *
3. Push the button to inspect the group No. display.
4. Set the group No. for each group with the button (The group No. increases in the manner of 1-00, 1-01, ...,1-15, 2-00,...4-15. However, the unified ON/OFF control displays only the group No. within the range selected by the switch for setting each address.)
5. Push the timer button to define the selected group No.
6. Push the TEST button to return to the normal mode.

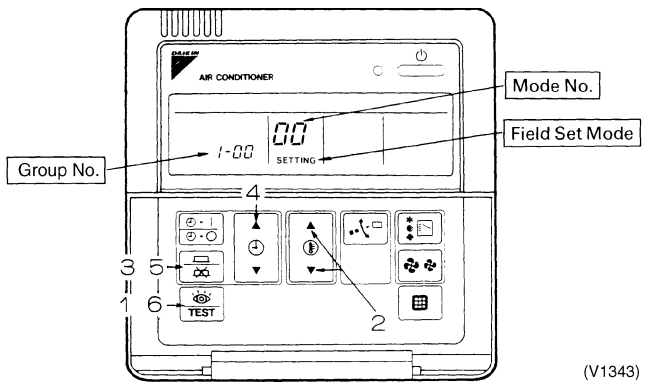

(V1343)

- Even if not using a remote control, connect the remote control when setting the group No., set the group No. for centralized control, and disconnect after making the setting.
- Set the group No. after turning on the power supply for the central remote control, unified ON/OFF control, and indoor unit.

BRC7A Type

- Group No. setting by infrared remote for centralized control

1. When in the normal mode, push TEST button for 4 seconds or more, and operation then enters the "field set mode."
2. Set mode No. "00" with button.
3. Set the group No. for each group with button (advance/backward).
4. Enter the selected group numbers by pushing button.
5. Push TEST button and return to the normal mode.

BRC7A Type

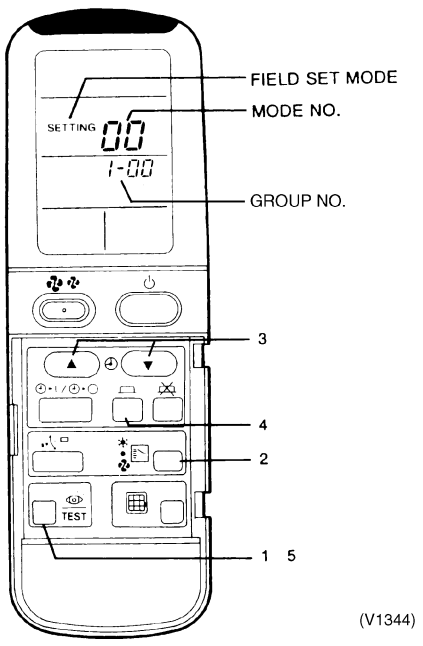

(V1344)

Все каталоги и инструкции здесь: https://splitsystema48.ru/instrukcii-po-ekspluatacii-kondicionerov.html

Si33-102.book Page 90 Tuesday, June 26, 2001 3:18 PM

BRC7C(4C) Type (BRC4C Type : without auto swing)

■ Group No. setting by infrared remote for centralized control

1. When in the normal mode, push /TEST button for 4 seconds or more, and operation then enters the "field set mode."
2. Set mode No. "00" with MODE button.
3. Set the group No. for each group with UP DOWN button (advance/backward).
4. Enter the selected group numbers by pushing RESERVE button.
5. Push /TEST button and return to the normal mode.

BRC7C (4C) Type

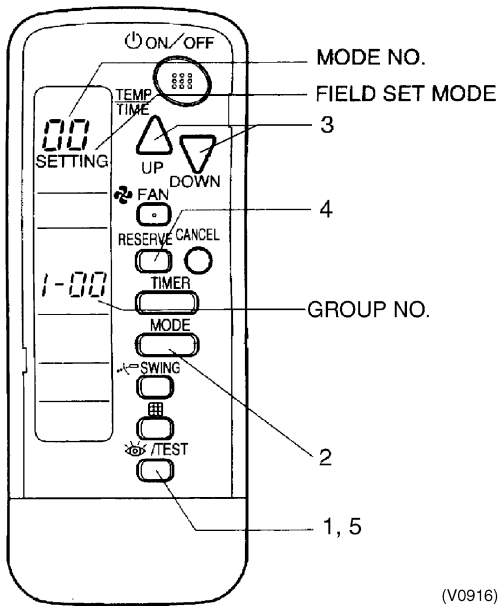

(V0916)

Group No. Setting Example

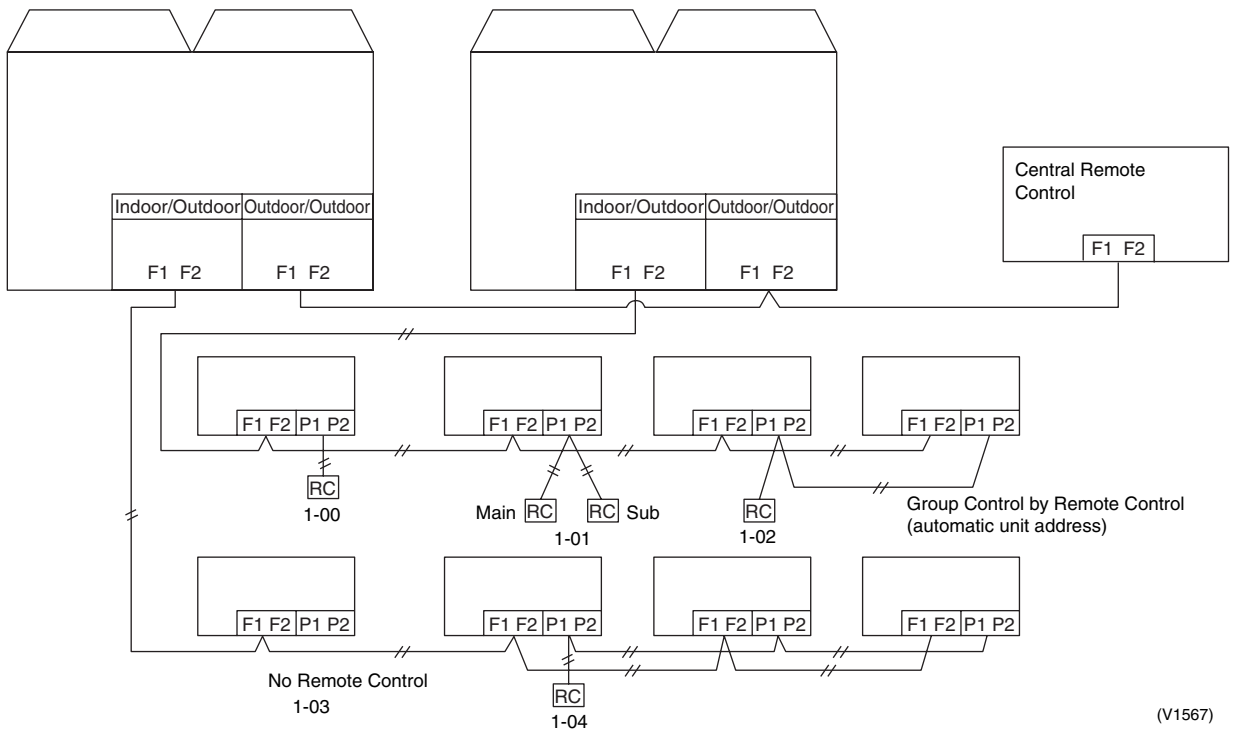

(V1567)

■ If you have to set the address for each unit for calculating cost, etc., set the mode No. to "30."

Caution When turning the power supply on, the unit may often not accept any operation while "88" is displaying after all indications were displayed once for about 1 minute on the liquid crystal display. This is not an operative fault.

Все каталоги и инструкции здесь: https://splitsystema48.ru/instrukcii-po-ekspluatacii-kondicionerov.html

Si33-102.book Page 91 Tuesday, June 26, 2001 3:18 PM

4.14 Contents of Control Modes

Twenty modes consisting of combinations of the following five operation modes with temperature and operation mode setting by remote control can be set and displayed by operation modes 0 through 19.

- ON/OFF control impossible by remote control
  Used when you want to turn on/off by central remote control only.
  (Cannot be turned on/off by remote control.)
- OFF control only possible by remote control
  Used when you want to turn on by central remote control only, and off by remote control only.
- Centralized
  Used when you want to turn on by central remote control only, and turn on/off freely by remote control during set time.
- Individual
  Used when you want to turn on/off by both central remote control and remote control.
- Timer operation possible by remote control
  Used when you want to turn on/off by remote control during set time and you do not want to start operation by central remote control when time of system start is programmed.

How to Select Operation Mode

Whether operation by remote control will be possible or not for turning on/off, controlling temperature or setting operation mode is selected and decided by the operation mode given on the right edge of the table below.

Example

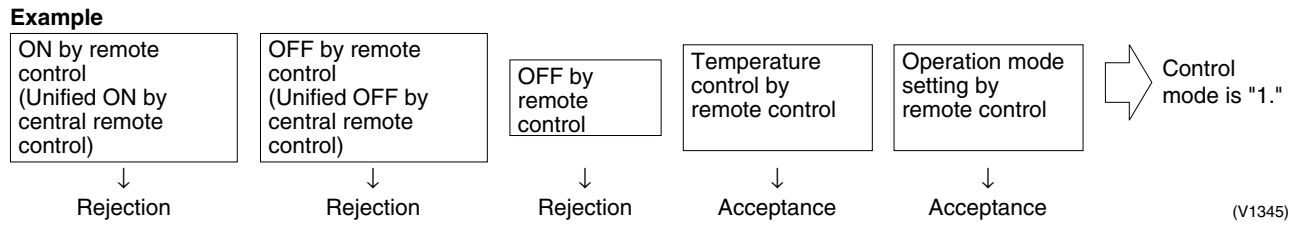

Control mode	Control by remote control					Control mode
	Operation		OFF	Temperature control	Operation mode setting	
	Unified operation, individual operation by central remote control, or operation controlled by timer	Unified OFF, individual stop by central remote control, or timer stop				
ON/OFF control impossible by remote control	Rejection (Example)	Rejection (Example)	Rejection (Example)	Rejection	Acceptance	0
					Rejection	10
				Acceptance (Example)	Acceptance (Example)	1(Example)
					Rejection	11
OFF control only possible by remote control			Acceptance	Rejection	Acceptance	2
					Rejection	12
				Acceptance	Acceptance	3
					Rejection	13
Centralized	Acceptance			Rejection	Acceptance	4
					Rejection	14
				Acceptance	Acceptance	5
					Rejection	15
Individual		Acceptance		Rejection	Acceptance	6
					Rejection	16
				Acceptance	Acceptance	7 ∗1
					Rejection	17
Timer operation possible by remote control	Acceptance (During timer at ON position only)	Acceptance (During timer at ON position only)		Rejection	Acceptance	8
					Rejection	18
				Acceptance	Acceptance	9
					Rejection	19

Do not select “timer operation possible by remote control” if not using a remote control. Operation by timer is impossible in this case.

∗1. Factory setting

Все каталоги и инструкции здесь: https://splitsystema48.ru/instrukcii-po-ekspluatacii-kondicionerov.html

Si33-102.book Page 92 Tuesday, June 26, 2001 3:18 PM

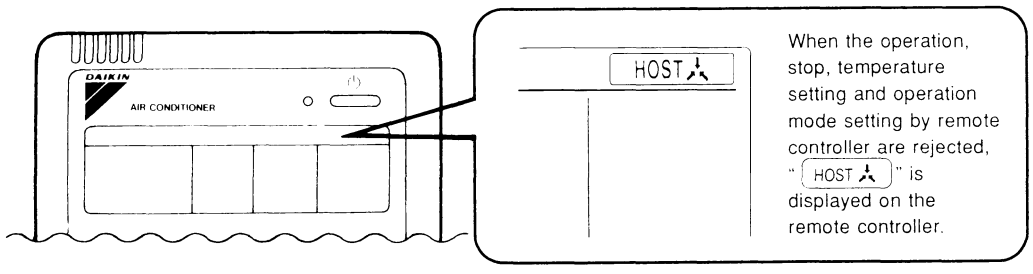

(V1346)

Все каталоги и инструкции здесь: https://splitsystema48.ru/instrukcii-po-ekspluatacii-kondicionerov.html

Si33-102.book Page 93 Tuesday, June 26, 2001 3:18 PM

5. Caution for Refrigerant Leaks

5.1 Caution for Refrigerant Leaks

5.1.1 Introduction

(Points to note in connection with refrigerant leaks)

The installer and system specialist shall secure safety against leakage according to local regulations or standards. The following standards may be applicable if local regulations are not available.

The VRV SYSTEM, like most other air conditioning systems, uses “R-22” as its refrigerant.“R-22” itself is an entirely safe non-toxic,non-combustible refrigerant but care must nevertheless be taken to ensure that the air conditioning facilities are installed in a room which is sufficiently large to avoid a *dangerous concentration of refrigerant gas in the unlikely event of a serious leak in the system. The KHK (High Pressure Gas Protection Association, in Japan) has established its own standard in respect of refrigerant gas concentrations for inclusion with the general standards covering refrigeration and air conditioning facilities.

5.1.2 Maximum Concentration Level

Dangerous concentration

Dangerous concentration means the maximum concentration of CFC gas which can be dealt quickly and with without damage to the person in the case of a leak of refrigerant into the air. The unit of measurement of the dangerous concentration is kg/m³ (the weight in kg of CFC gas in 1m³ of air) for ease of calculation.

Dangerous concentration of R-22: 0.3 kg/m³

(KHK facility standard: S0010)

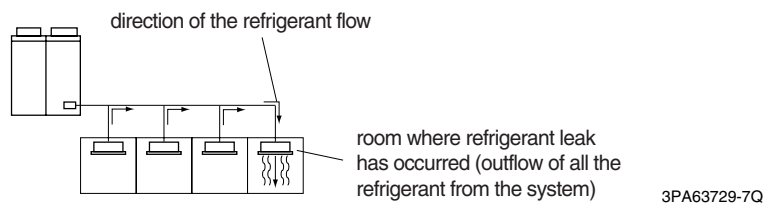

Pay a special attention to the place, such as a basement, etc. where refrigerant can stay, since refrigerant is heavier than air.

Все каталоги и инструкции здесь: https://splitsystema48.ru/instrukcii-po-ekspluatacii-kondicionerov.html

Si33-102.book Page 94 Tuesday, June 26, 2001 3:18 PM

5.1.3 Procedure for Checking Maximum Concentration

Check the maximum concentration level in accordance with steps 1 to 4 below and take whatever action is necessary to comply.

Step 1

Calculate the amount of refrigerant (kg) charged to each system separately.

amount of refrigerant in a single unit system (amount of refrigerant with which the system is charged before leaving the factory)	+	additional charging amount (amount of refrigerant added locally in accordance with the length or diameter of the refrigerant piping)	=	total amount of refrigerant (kg) in the system

Note:
- Where a single refrigerant facility is divided into 2 entirely independent refrigerant systems then use the amount of refrigerant with which each separate system is charged.

Step 2

Calculate the smallest room volume (m^3)
Incase like the following, calculate the volume of (A), (B) as a single room or as the smallest room.

A. Where there are no smaller room divisions

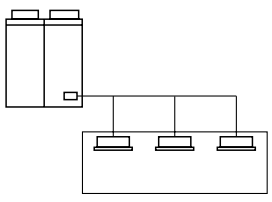

Fig. 33
(V0886)

B. Where there is a room division but there is an opening between the rooms sufficiently large to permit a free flow of air back and forth.

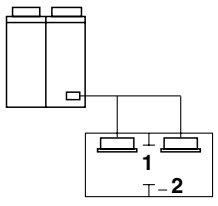

Fig. 34
(V0887)

1. Opening between rooms
2. Partition

(Where there is an opening without a door or where there are openings above and below the door which are each equivalent in size to 0.15% or more of the floor area.)

Step 3

Calculating the refrigerant density using the results of the calculations in steps 1 and 2 above.

$$\frac{\text{total volume of refrigerant in the refrigerant system}}{\text{size } (m^3) \text{ of smallest room in which there is an indoor unit installed}} \leq \text{maximum concentration level } (kg/m^3)$$

If the result of the above calculation exceeds the maximum concentration level then make similar calculations for the second then third smallest room and so until the result falls short of the maximum concentration.

Step 4

Dealing with the situations where the result exceeds the maximum concentration level.
Where the installation of a facility results in a concentration in excess of the maximum concentration level then it will be necessary to revise the system.
Please consult your Daikin supplier.

Все каталоги и инструкции здесь: https://splitsystema48.ru/instrukcii-po-ekspluatacii-kondicionerov.html

Si33-102.book Page 95 Tuesday, June 26, 2001 3:18 PM

Step 5

Dealing with situations where the result exceeds the dangerous concentration level.
Where the installation of a facility results in a concentration in excess of the dangerous concentration level then it may be necessary to revise the system design to some extent or else take one of the following courses of action.

Action 1: **Making openings which will allow the air to flow freely into the room.**
Make openings above and below the door which are each equivalent in size to 0.15% or more of the floor area or make a doorless opening.

Action 2: **Fit a mechanical ventilator linked to a gas leak detection alarm device.**

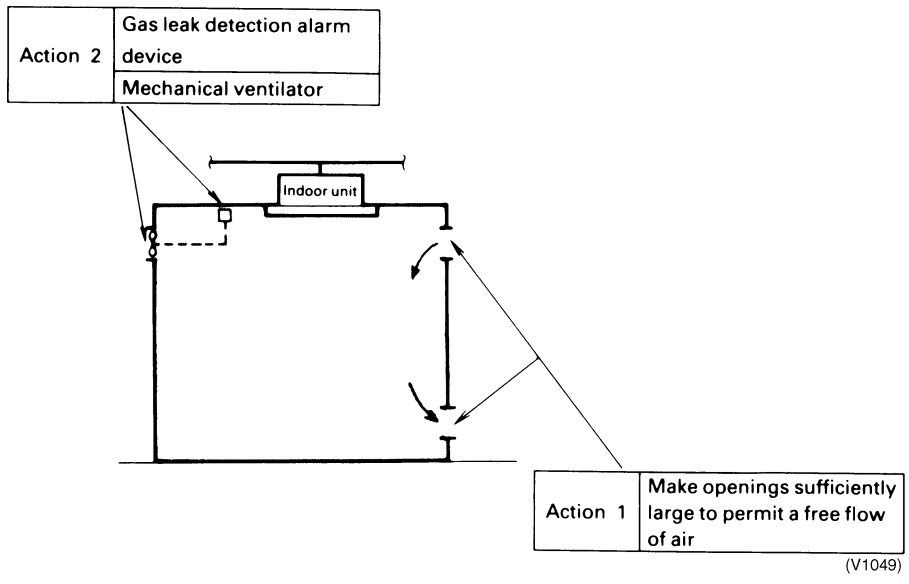

Все каталоги и инструкции здесь: https://splitsystema48.ru/instrukcii-po-ekspluatacii-kondicionerov.html

Si33-102.book Page 96 Tuesday, June 26, 2001 3:18 PM

6. Hand Over to Customer

6.1 Operational Steps

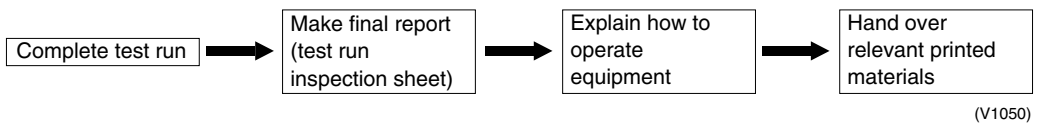

(V1050)

Important Points

a) The measurements taken during the test run should be recorded and kept on a test run inspection sheet.
b) Do not forget to record the **length of the refrigerant piping** and the **refrigerant additional charging volume** on the plate on the back of the outdoor unit external notice board, as this information will be required for servicing the system.
c) Explain to the customer how to operate the equipment and let him try it.
d) Assemble all the relevant diagrams and other printed matter which is required to operate the system and hand it all over to the customer (on the spot) and tell him to keep it.

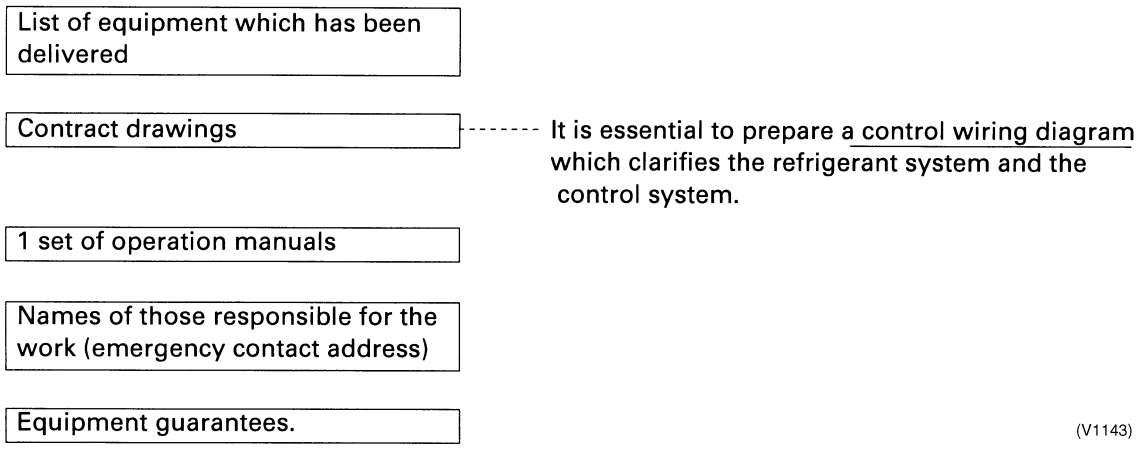

(V1143)

e) Make the service contact address clear.

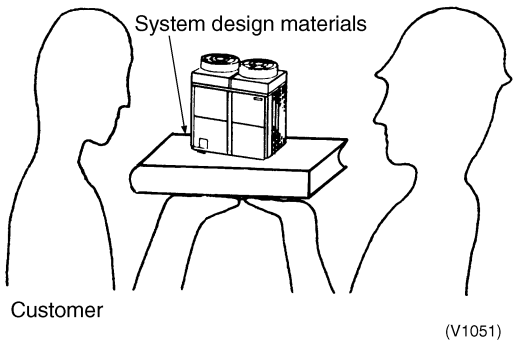

(V1051)

Все каталоги и инструкции здесь: https://splitsystema48.ru/instrukcii-po-ekspluatacii-kondicionerov.html

Si33-102.book Page 97 Tuesday, June 26, 2001 3:18 PM

7. Appendix

7.1 Allowable Piping Length

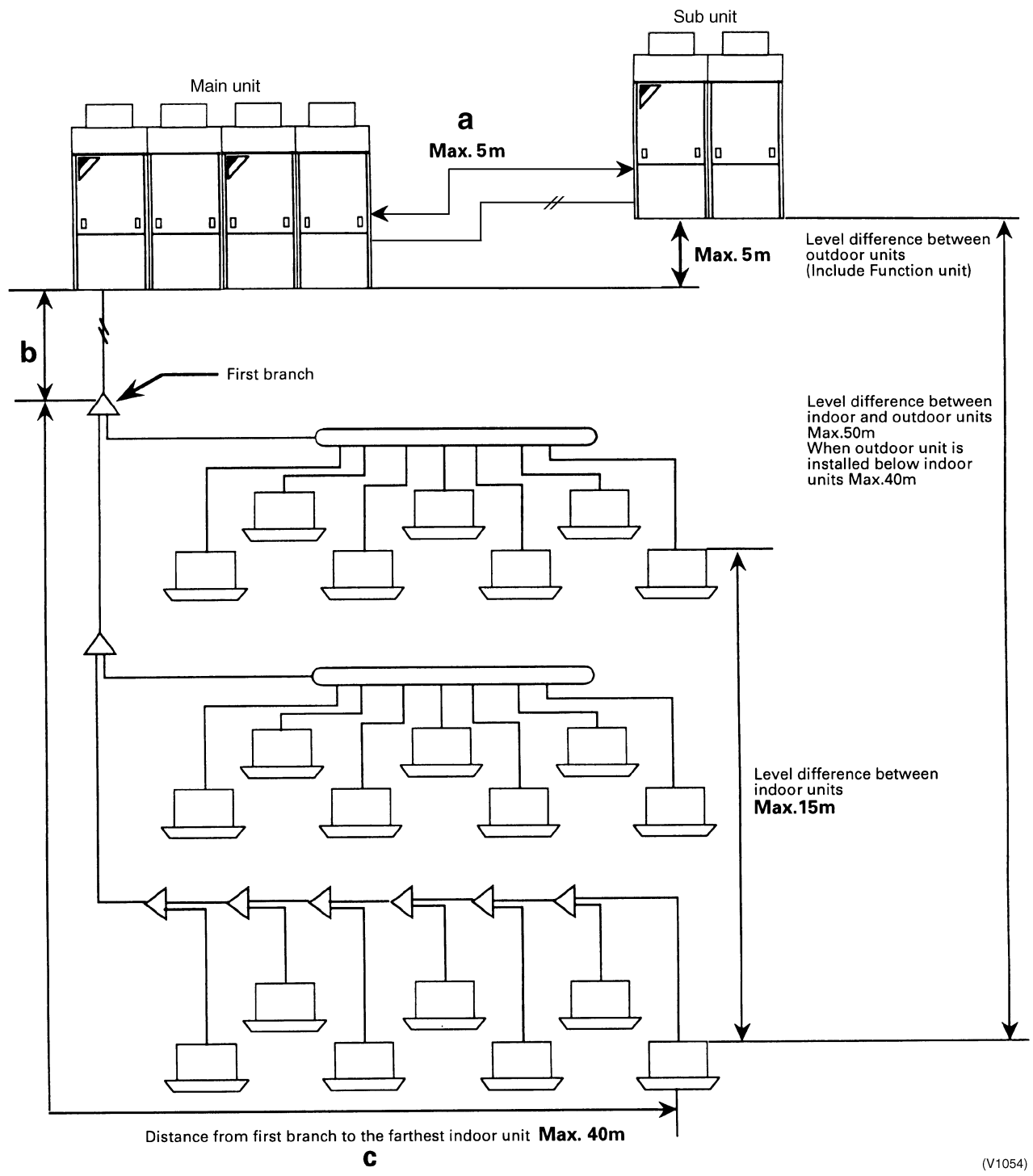

Points of piping desigh

1. b + c = 100m
2. Level difference between outdoor units (Main and Sub units) a ≤ 5 m
3. Piping distance between first branch and the farthest indoor unit ≤ 40 m
4. Level difference between indoor units ≤ 15 m
5. Level difference between indoor and outdoor unit ≤ 50 m
   (Level difference is lower than 40 m when outdoor unit is installed below indoor unit.)
6. Refnet joint and header are not downstream for first installed Refnet header.

Все каталоги и инструкции здесь: https://splitsystema48.ru/instrukcii-po-ekspluatacii-kondicionerov.html

Si33-102.book Page 98 Tuesday, June 26, 2001 3:18 PM

7.2 Selection of Refrigerant Pipe Size

Capacity of indoor unit and size of refrigerant pipe (G)

Class		20	25	32	40	50	63	80	100	125	200	250
Cooling Capacity (19.5 ˚CWB)	kcal/h	2,000	2,500	3,150	4,000	5,000	6,300	8,000	10,000	12,500	20,000	25,000
	Btu/h	7,900	9,900	12,500	15,900	19,900	25,000	31,800	39,700	49,600	79,000	99,000
	kW	2.3	2.9	3.7	4.7	5.8	7.3	9.3	11.6	14.5	23.0	28.8
Cooling Capacity (19 ˚CWB)	kW	2.2	2.8	3.6	4.5	5.6	7.1	9.0	11.2	14.0	22.4	28.0
Heating Capacity	kcal/h	2,200	2,800	3,400	4,300	5,400	6,900	8,600	10,800	13,800	21,500	27,000
	Btu/h	8,500	10,900	13,600	17,000	21,500	27,300	34,100	42,700	54,600	85,300	107,500
	kW	2.5	3.2	4.0	5.0	6.3	8.0	10.0	12.5	16.0	25.0	31.5
Liquid Pipes		ϕ6.4				ϕ9.5			ϕ9.5		ϕ12.7	ϕ12.7
Gas Pipes		ϕ12.7				ϕ15.9			ϕ19.1		ϕ25.4	ϕ28.6

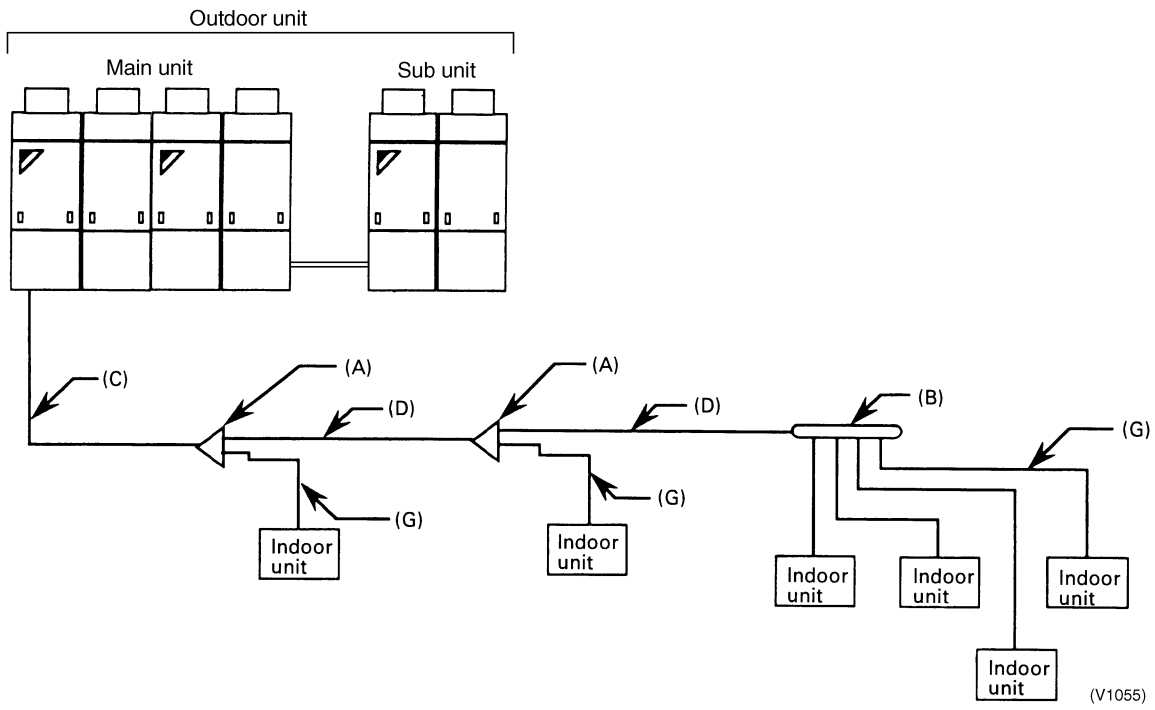

■ **Selection of branch kit...REFNET joint (A) and REFNET beader (B)**

Capacity	REFNET joint (A)	REFNET header (B)
Less than 100	KHRJ26K11T	KHRJ26K11H (Max. 4 branches)
100 or more to 160 (160 excluded)	KHRJ26K18T	KHRJ26K18H (Max. 6 branches)
160 or more to 330 (330 excluded)	KHRJ26K37T	KHRJ26K37H (Max. 8 branches)
330 or more to 640 (640 excluded)	KHRJ26K40T + KHRJ26K40TP ★Note 1	KHRJ26K40H (Max. 8 branches) + KHRJ26K40HP ★Note 1
640 or more	KHRJ26K75T + KHRJ26K75TP	★Note 2

Note:
1. KHRJ26K40/75TP or KHRJ26K40HP are pipe size reducer.
2. For system with total capacity of 640 and over, connect REFNET header after the REFNET joint branch kit.

Все каталоги и инструкции здесь: https://splitsystema48.ru/instrukcii-po-ekspluatacii-kondicionerov.html

Si33-102.book Page 99 Tuesday, June 26, 2001 3:18 PM

■ **Between outdoor unit and first branch kit (C)**

Applicable Model	Pipe Size (out. dia. × min. wall thickness)	
	Liquid Pipe	Gas Pipe (main)
RXY16KA	ϕ15.9 × t1.0	ϕ34.9 × t1.3
RXY18~20KA	ϕ19.1 × t1.0	ϕ34.9 × t1.3
RXY24KA	ϕ19.1 × t1.0	ϕ41.3 × t1.7
RXY26~30KA	ϕ22.2 × t1.2	ϕ41.3 × t1.7

■ **Between branches kit (D)**

Total Capacity Index of Indoor Unit after Branch	Pipe Size (out. dia. × min. wall thickness)	
	Liquid Pipe	Gas Pipe
Below 100	ϕ9.5 × t0.8	ϕ15.9 × t1.0
100 to below 160	ϕ9.5 × t0.8	ϕ19.1 × t1.0
160 to below 330	ϕ12.7 × t0.8	ϕ25.4 × t1.2
330 to below 480	ϕ15.9 × t1.0	ϕ34.9 × t1.3
480 to below 640	ϕ19.1 × t1.0	ϕ34.9 × t1.3
640 and over	ϕ19.1 × t1.0	ϕ41.3 × t1.7

Все каталоги и инструкции здесь: https://splitsystema48.ru/instrukcii-po-ekspluatacii-kondicionerov.html

Si33-102.book Page 100 Tuesday, June 26, 2001 3:18 PM

7.3 Additional Charge of Refrigerant

Notes:
1. Refrigerant must be replenished for the R-22 VRV PLUS Series just as with past VRV Series.
2. If refrigerant is not replenished, the system will not operate properly.
3. For information on how to calculate the amount of refrigerant to be added, see next page.

Heat Pump System Example

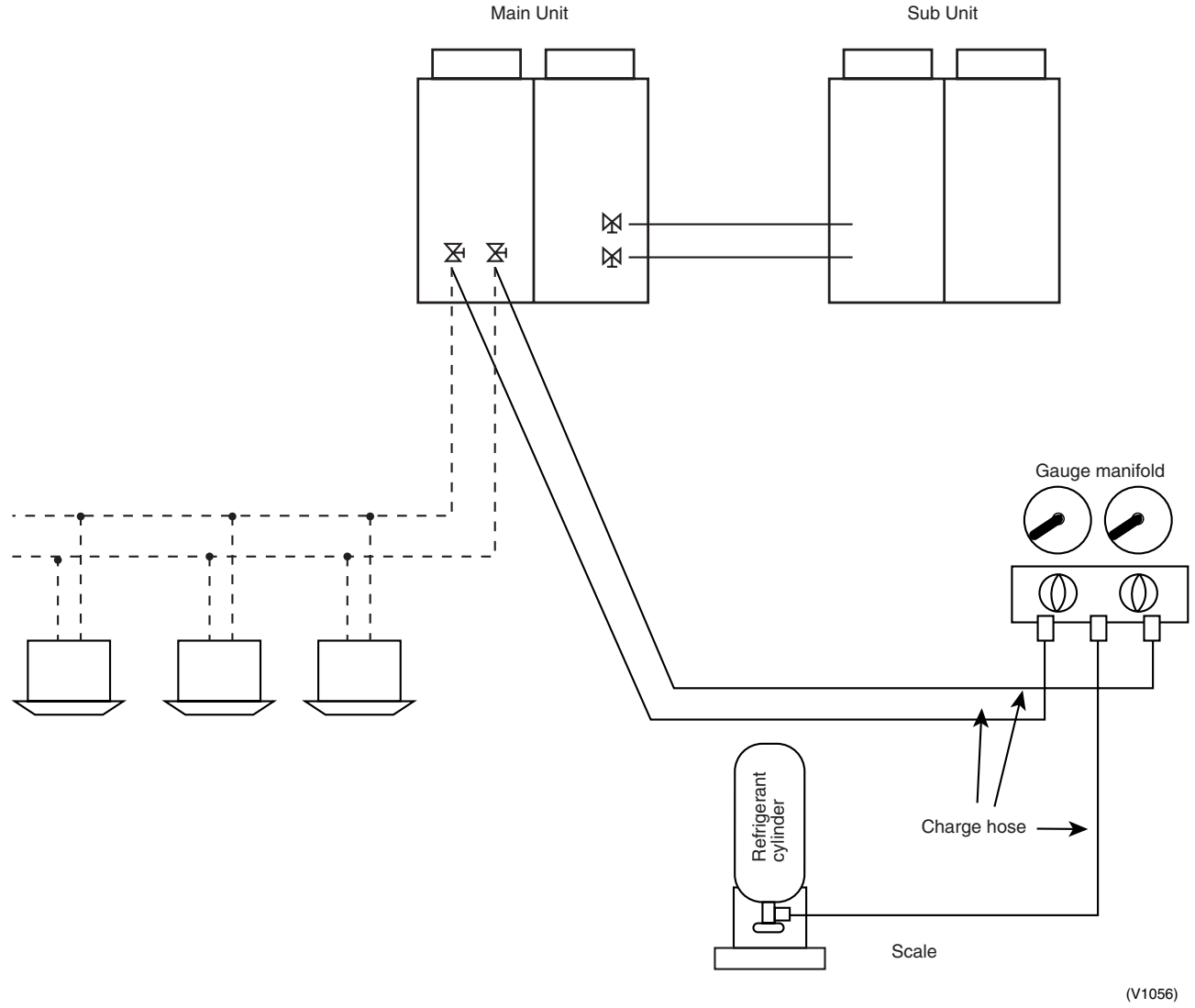

Work points
1. Select a level spot to place the scale.
2. Invert the refrigerant cylinder and refill in liquid state.
3. Be careful not to get frostbitten by refrigerant when purging air from the charge hose. (About –40˚C in atmosphere for R-22)
4. Refill from liquid pipe and pressure equalizing pipe simultaneously.
5. You don't have to replenish refrigerant for each system. (You must check if the system need additional refrigerant charge before proceeding.)
6. Be sure to record the amount of refrigerant added on the label provided on the outdoor unit for that purpose as a reference for service or maintenance later on.

You must add refrigerant according to the length of piping in the field just as with previous VRV Series. It may be convenient to record the length of the piping after installation on the outdoor unit's label. When you are finished vacuuming the system, add refrigerant before opening the outdoor unit's stop valve. Amount of refrigerant is calculated according to the length of the liquid pipe.

Все каталоги и инструкции здесь: https://splitsystema48.ru/instrukcii-po-ekspluatacii-kondicionerov.html

Si33-102.book Page 101 Tuesday, June 26, 2001 3:18 PM

Table 1: Additional refrigerant per meter of piping (liquid pipe)

Piping Size (ϕ)	Refrigerant Amount (kg)
22.2	0.36
19.1	0.27
15.9	0.17
12.7	0.10
9.5	0.05
6.4	0.025

7.3.1 Precautions in Charging Refrigerant

Mark the Model Number of the Indoor Unit and Its Location.

This information is needed for aftercare service.

Indoor unit model number	1	2	3	4	5	6	7	8
Location								
Indoor unit model number	9	10	11	12	13	14	15	16
Location								
Indoor unit model number	17	18	19	20	21	22	23	24
Location								
Indoor unit model number	25	26	27	28	29	30	31	32
Location								

Все каталоги и инструкции здесь: https://splitsystema48.ru/instrukcii-po-ekspluatacii-kondicionerov.html

Si33-102.book Page 102 Tuesday, June 26, 2001 3:18 PM

Calculating Refrigerant Charge

- Calculate the charge of refrigerant needed as described below, and add accordingly.
- Record your calculations for use by aftercare service.

Total length of liquid line piping (ϕ 22.2)	+	Total length of liquid line piping (ϕ 19.1)

+	Total length of liquid line piping (ϕ 5.9)	+	Total length of liquid line piping (ϕ 12.7)

+	Total length of liquid line piping (ϕ 9.5)	+	Total length of liquid line piping (ϕ 6.4)

+ { 0 :RSXY16,18,24,28KA
0.4:RSXY30KA
0.6:RSXY26KA
0.8:RSXY20KA

(V1886)

Example of refrigerant branch using REFNET joint for RSXY28

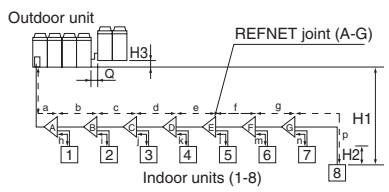

(V1057)

a : ϕ 22.2 × 10m	i : ϕ 6.4 × 5m
b : ϕ 22.2 × 2m	j : ϕ 6.4 × 5m
c : ϕ 22.2 × 5m	k : ϕ 6.4 × 5m
d : ϕ 19.5 × 5m	l : ϕ 9.5 × 5m
e : ϕ 15.9 × 5m	m : ϕ 6.4 × 5m
f : ϕ 12.7 × 5m	n : ϕ 6.4 × 5m
g : ϕ 9.5 × 5m	p : ϕ 6.4 × 5m
h : ϕ 9.5 × 5m	

R = 17 × 0.36 + 5 × 0.27 + 5 × 0.17 + 5 × 0.10
(a+b+c, d, e, f)
+ 15 × 0.05 + 30 × 0.025 + 0
(g+h+l, i+j+k+m+n+p)
= 6.12 + 1.35 + 0.85 + 0.5 + 0.75 + 0.75 + 0 = 10.32kg
⇩
10.3kg (V1666)

Example of refrigerant branch using REFNET joint and REFNET header for RSXY28

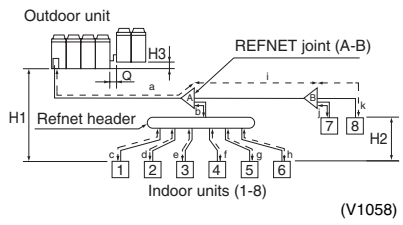

(V1058)

a : ϕ 22.2 × 30m	g : ϕ 6.4 × 10m
b : ϕ 15.9 × 10m	h : ϕ 6.4 × 20m
c : ϕ 9.5 × 10m	i : ϕ 12.7 × 10m
d : ϕ 9.5 × 10m	j : ϕ 6.4 × 10m
e : ϕ 9.5 × 10m	k : ϕ 6.4 × 9m
f : ϕ 9.5 × 10m	

R = 30 × 0.36 + 10 × 0.17 + 10 × 0.10
(a, b, i)
+ 40 × 0.05 + 49 × 0.025 + 0 = 16.72
(c+d+e+f, g+h+j+k)
⇩
16.7kg (V1667)

Example of refrigerant branch using REFNET header for RSXY28

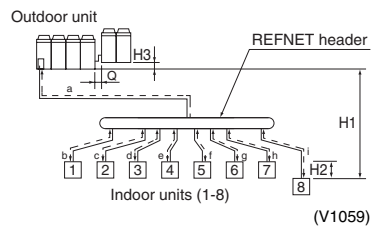

(V1059)

a : ϕ 22.2 × 20m	f : ϕ 6.4 × 23m
b : ϕ 9.5 × 10m	g : ϕ 6.4 × 20m
c : ϕ 9.5 × 10m	h : ϕ 6.4 × 20m
d : ϕ 6.4 × 20m	i : ϕ 6.4 × 30m
e : ϕ 6.4 × 10m	

R = 20 × 0.36 + 20 × 0.05 + 123×0.025
(a, b+c, d+e+f+g+h+i)
= 7.2 + 1.0 + 3.07 = 11.27
⇩
11.3kg (V1668)

Full Refrigerant Recharging

The amount of refrigerant needed to completely recharge the system equals to that of the refrigerant charge at factory set (marked on name plate) plus the above additional charge.

Extracting Refrigerant

Open the stop valves on both the gas line and liquid line, and extract the refrigerant from the service ports.

Все каталоги и инструкции здесь: https://splitsystema48.ru/instrukcii-po-ekspluatacii-kondicionerov.html

Si33-102.book Page 103 Tuesday, June 26, 2001 3:18 PM

7.4 REFNET Pipe Connections for VRV PLUS Series

7.4.1 REFNET JOINT (for Cooling Only and Heat Pump System)

■ KHRJ26K11T (less than 100)

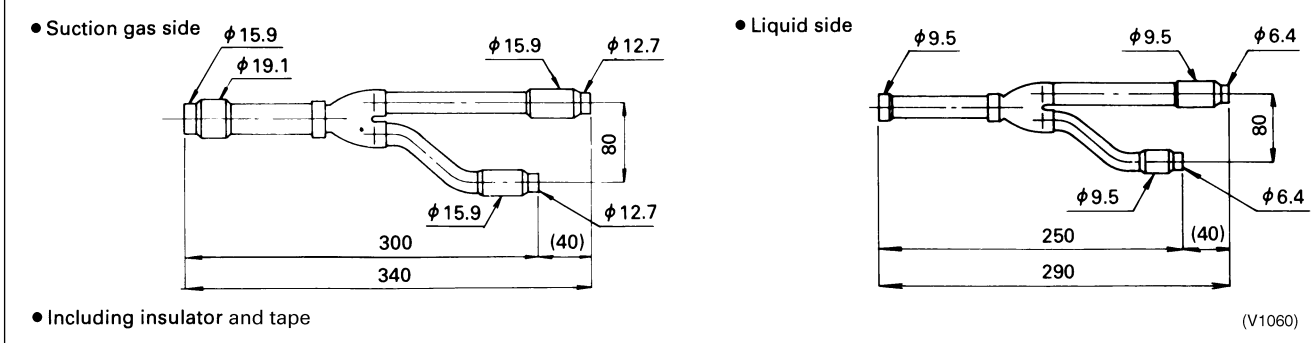

■ KHRJ26K17T (100 or more)

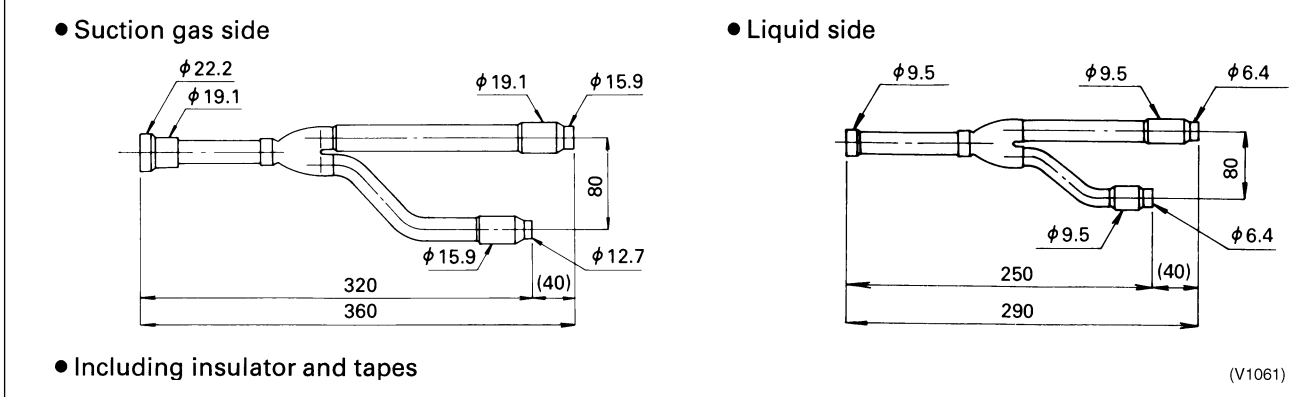

■ KHRJ26K18T (100 or more 160)

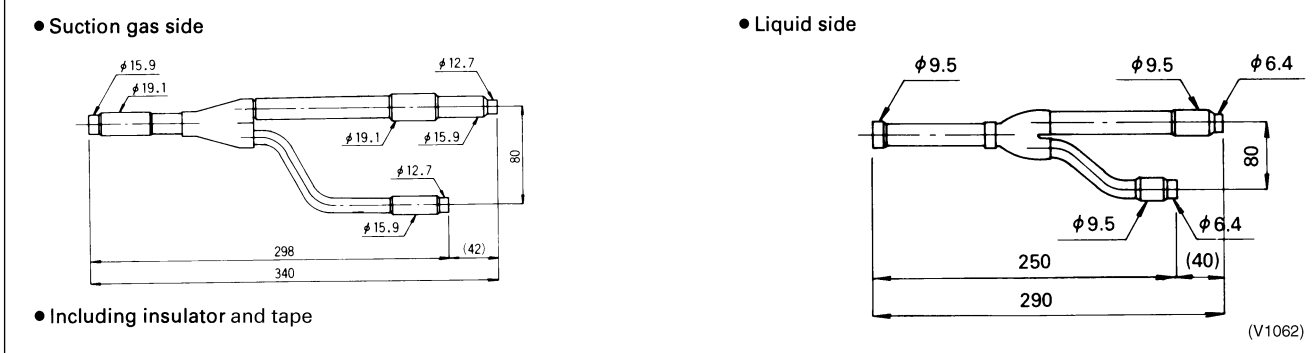

■ KHRJ26K37T (160 or more 330)

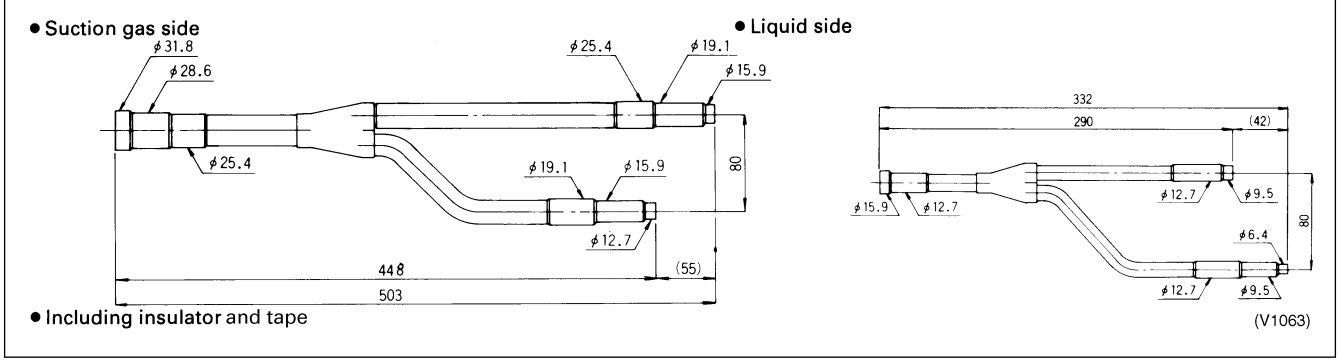

Все каталоги и инструкции здесь: https://splitsystema48.ru/instrukcii-po-ekspluatacii-kondicionerov.html

Si33-102.book Page 104 Tuesday, June 26, 2001 3:18 PM

■ KHRJ26K40T (330 or more 640)

● Suction gas side

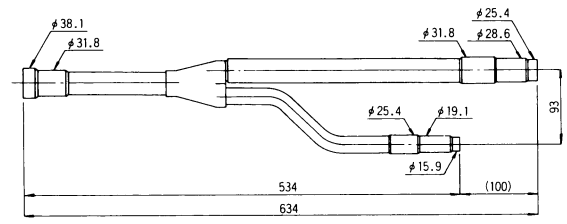

● Liquid side

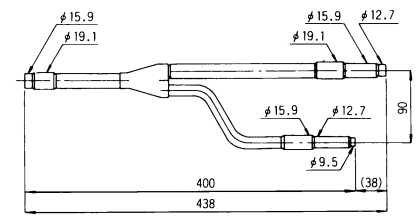

● Including insulator, reducing joint Liquid side φ9.5→φ6.4, φ15.9→φ12.7 gas side φ25.4→φ28.6, φ31.8→φ38.1

(V1064)

■ KHRJ26K75T (640 or more)

● Suction gas side

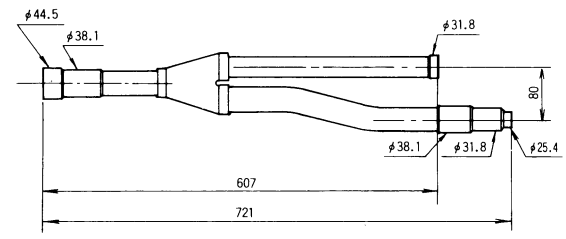

● Liquid side

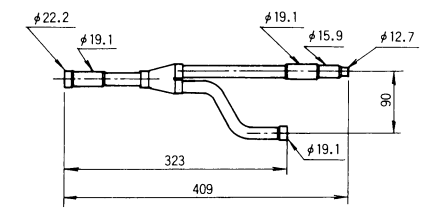

● Including insulator, universal joint Suction gas side φ31.8→φ38.1→φ44.5, φ25.4→φ19.1→φ15.9
Liquid side φ19.1→φ15.9→φ12.7, φ12.7→φ9.5→φ6.4

(V1065)

7.4.2 REFNET HEADER (for Cooling Only and Heat Pump System)

■ KHRJ26K11H (4 branch fitting) (less than 100)

● Suction gas side

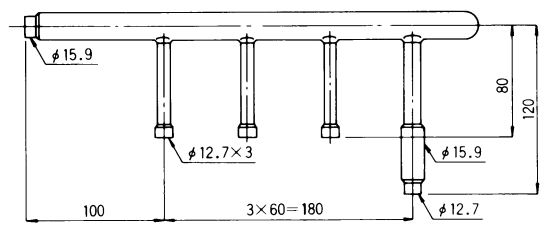

● Liquid side

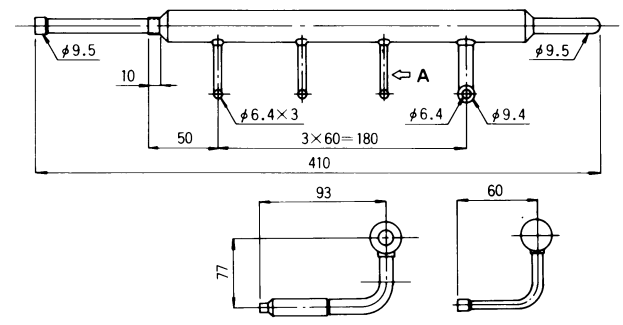

● Including insulator, cap pipes and tapes

(V1066)

■ KHRJ26K17H (8 branch fitting) (100 or more)

● Suction gas side

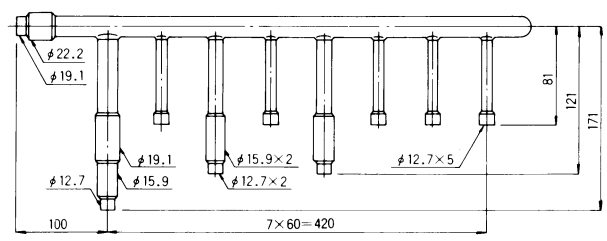

● Liquid side

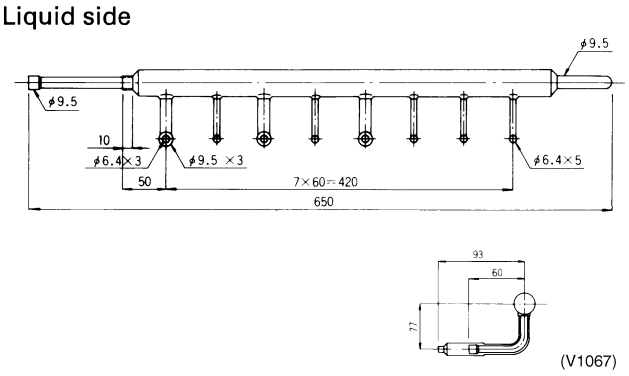

● Including insulator, cap pipes and tapes

(V1067)

Все каталоги и инструкции здесь: https://splitsystema48.ru/instrukcii-po-ekspluatacii-kondicionerov.html

Si33-102.book Page 105 Tuesday, June 26, 2001 3:18 PM

■ KHRJ26K18H (6 branch fitting) (100 or more 160)

● Suction gas side

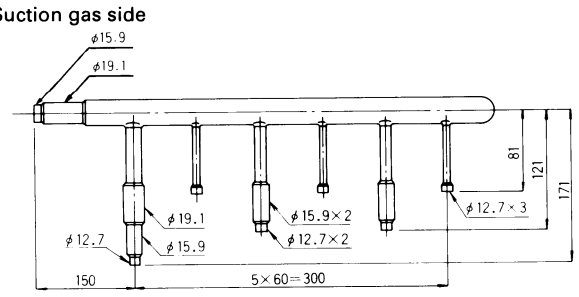

● Liquid side

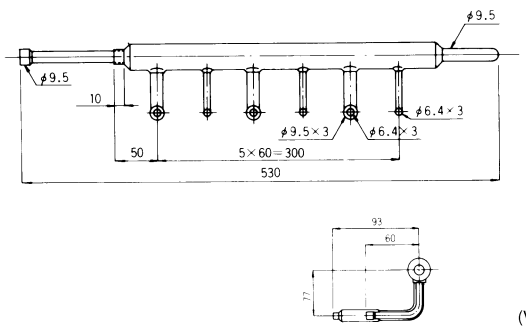

● Including insulator, cap pipes and tapes

(V1068)

■ KHRJ26K37H (8 branch fitting) (160 or more 330)

● Suction gas side

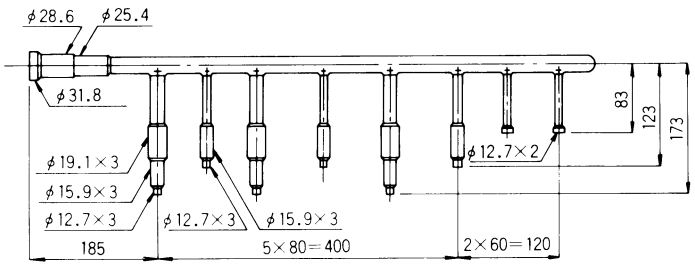

● Liquid side

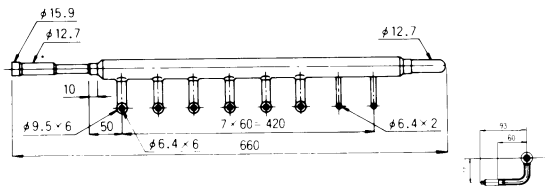

● Including insulator, cap pipes and tapes

(V1069)

■ KHRJ26K40H (8 branch fitting) (330 or more 640)

● Suction gas side

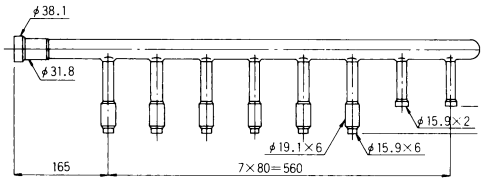

● Liquid side

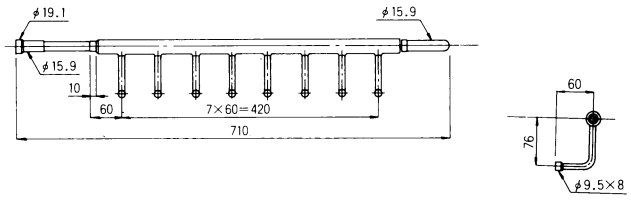

● Including insulator, cap pipes and tapes

(V1070)

Все каталоги и инструкции здесь: https://splitsystema48.ru/instrukcii-po-ekspluatacii-kondicionerov.html

Si33-102.book Page 106 Tuesday, June 26, 2001 3:18 PM

7.4.3 PIPE SIZE REDUCER (For R-22)

■ **This kit including followings;**

Name		Pipe size reducer (1)	Pipe size reducer (2)	Pipe size reducer (3)
Figure		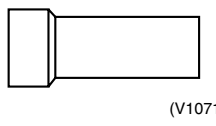 (V1071)	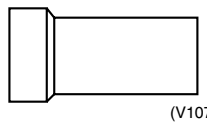 (V1072)	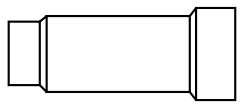 (V1073)
Q'ty	KHRJ26K40TP	1	—	1
	KHRJ26K40HP	—	—	1
	KHRJ26K75TP	1	1	1

■ **This kits are pipe size reducers for REFNET JOINT and HEADER and applicable to following REFNET CONNECTOR.**

Kit Name	REFNET CONNECTOR
KHRJ26K40TP	KHRJ26K40T (Gas pipe)
KHRJ26K40HP	KHRJ26K40H (Gas pipe)
KHRJ26K75TP	KHRJ26K75T (Gas pipe)

The figure and size of pipe size reducers are as followings;

Pipe size reducer (1)	Pipe size reducer (2)	Pipe size reducer (3)
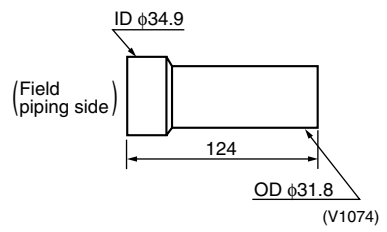 (V1074)	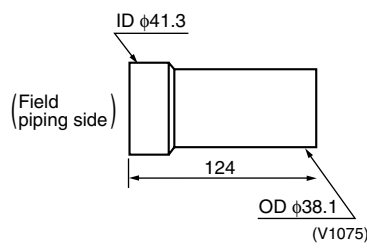 (V1075)	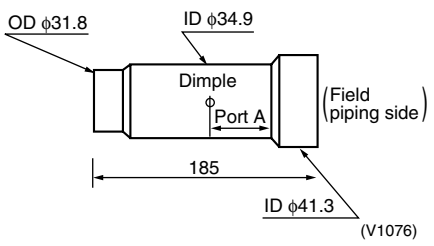 (V1076) ★ For ϕ34.9, cut the center of the part A.

1. Select the field piping size according to the installation manual of the BRANCH PIPING KIT.
2. Connect the PIPE SIZE REDUCER suitable for the field piping size to the branch piping kit.

ex.)Connect the reducers to the branch piping kit, KHRJ26K75T. For inlet piping size is ϕ41.3 and outlet 1·2 piping size are ϕ34.9.

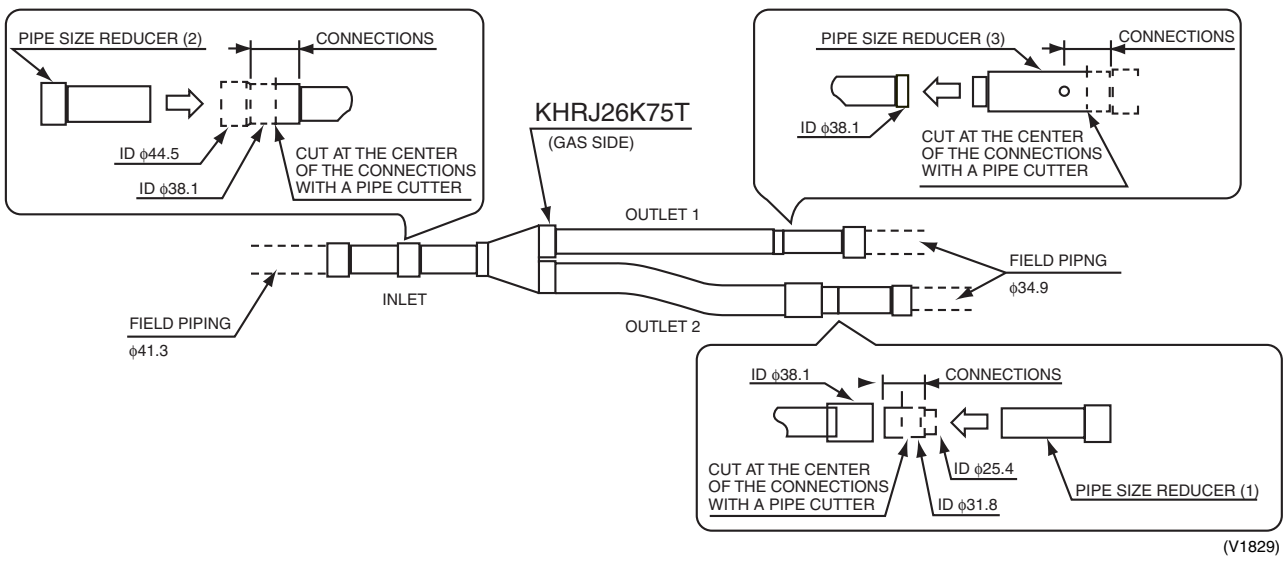

(V1829)

Все каталоги и инструкции здесь: https://splitsystema48.ru/instrukcii-po-ekspluatacii-kondicionerov.html

Si33-102.book Page 107 Tuesday, June 26, 2001 3:18 PM

7.4.4 Piping Kits for Side and Bottom Piping – Outdoor Unit

Piping kit for side piping KHF30A30L

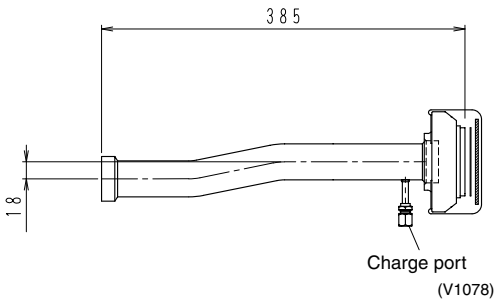

Gas side piping

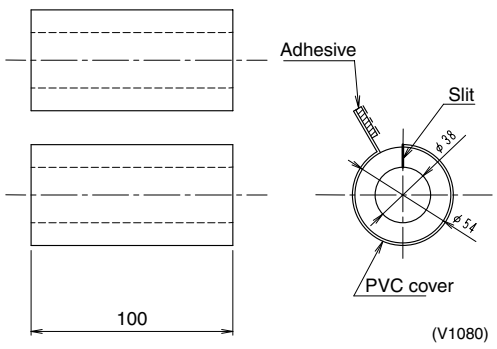

Insulation material 2pcs.

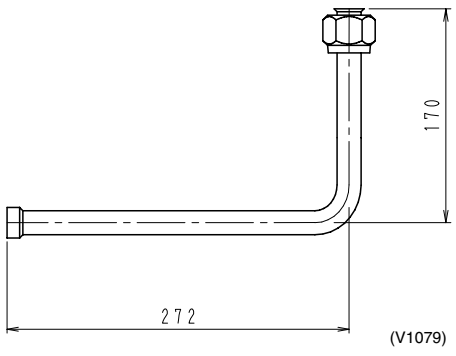

Liquid side piping

Piping kit for bottom piping KHF30A30U

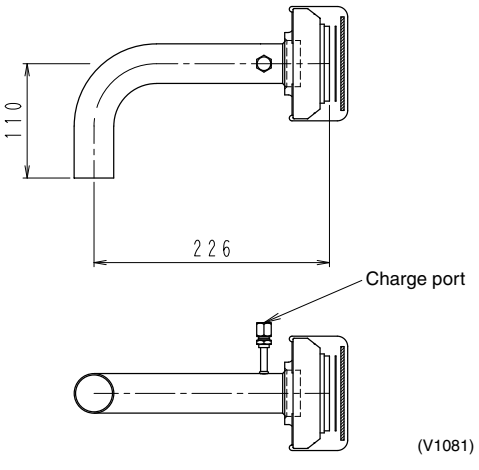

Gas side piping

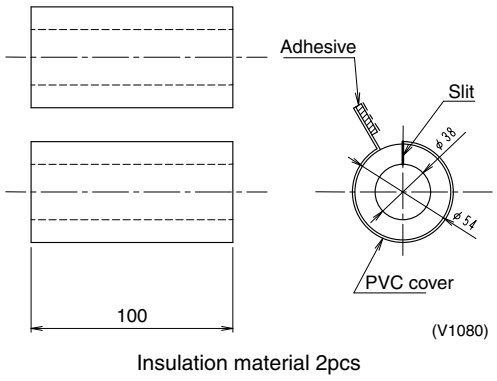

Insulation material 2pcs

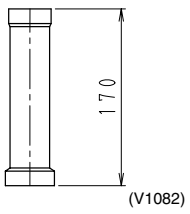

Gas side piping

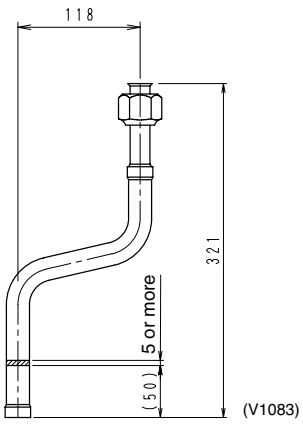

Liquid side piping

Все каталоги и инструкции здесь: https://splitsystema48.ru/instrukcii-po-ekspluatacii-kondicionerov.html

Si33-102.book Page 108 Tuesday, June 26, 2001 3:18 PM

REFNET Joint and Header Installation

1. REFNET joint

(Gas line and liquird line branch pipe)

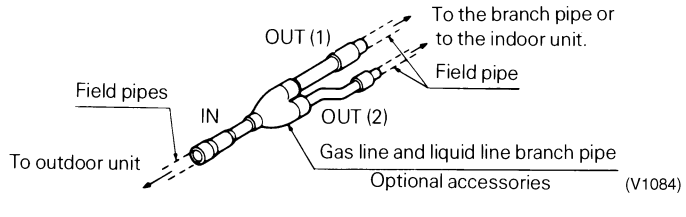

- If the selected building pipe differs form the branch pipe in size, cut the conneciton with a pipe cutter as shown below.

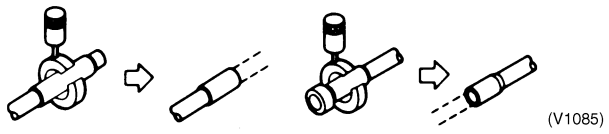

- Install the branch pipe either vertically or horizontally.

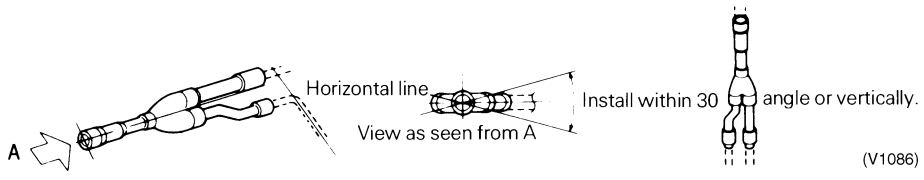

- Insulate the branch pipe as described in the kit installation manual.

2. REFNET header

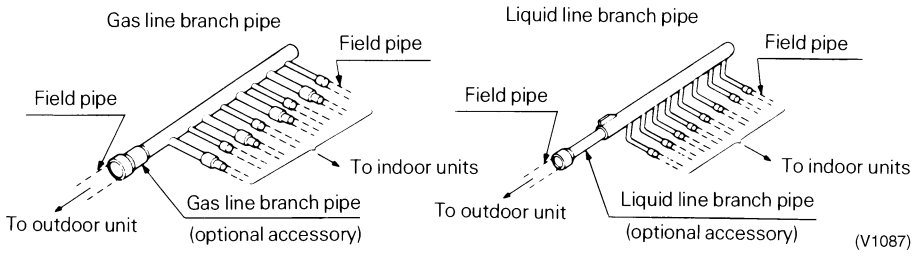

- If the selected field pipe differs from the branch pipe in size, cut the connection with a pipe cutter as shown below.

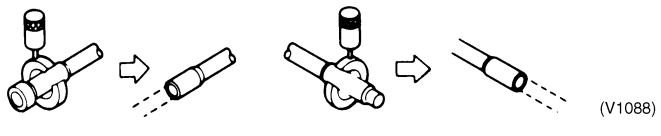

- Fit a stop end on all open branch pipe connections not in use.

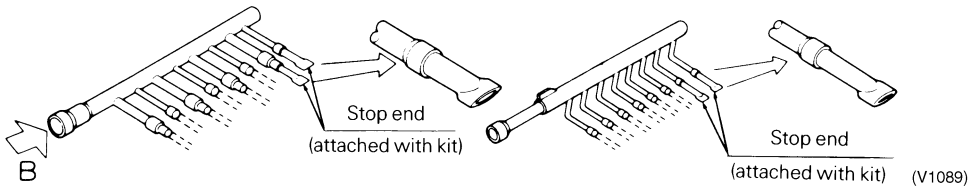

- Install the branch pipe horizontally.

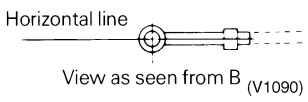

- Insulate the branch pipe as described in the kit installation manual.

Note:
- Install the REFNET joint horizontally or vertically, keeping it sithin a 30 angle when installed horizontally.
- Install the REFNET header so that it branches horizontally.
- Do not used a T-joint for the branch pipe.

Все каталоги и инструкции здесь: https://splitsystema48.ru/instrukcii-po-ekspluatacii-kondicionerov.html

Si33-102.book Page 109 Tuesday, June 26, 2001 3:18 PM

7.5 VRV Inspection Sheet

Inspection date:
Delivery date:
Transfer date:

Owner		System name	

Outdoor units

	Installation location	Model	Unit No.
Outdoor unit			
Main unit			
Sub unit			

Indoor units

No.	Installation	Model	Unit No.	Group No.	No.	Installation	Model	Unit No.	Group No.
1					17				
2					18				
3					19				
4					20				
5					21				
6					22				
7					23				
8					24				
9					25				
10					26				
11					27				
12					28				
13					29				
14					30				
15					31				
16					32				

Field settings

C/H SELECT (setting mode 1)			C/H SELECT setting (SS1)			Low noise operation			Sequential start	
IND	MAIN	SUB	IN/D		OUT/D	ON		OFF	ON	OFF
Tc			Te			Defrost SETTING			Refrigerant addition/replenishment	
H	M	L	H	M	L	H	M	L	kg	

Company name Inspector

(V1830)

Все каталоги и инструкции здесь: https://splitsystema48.ru/instrukcii-po-ekspluatacii-kondicionerov.html

Si33-102.book Page 110 Tuesday, June 26, 2001 3:18 PM

Before turning on the power

System name

	Inspection item	Inspection method	Standard (guideline)	Measurement values				Decision
	Breaker capacity	Visual inspection	Specified capacity	G NG				
Main unit	Refrigerant piping system	Gas detector	No leaks	G NG				
	Heat exchanger	Visual inspection	No clogging or damage	G NG				
	Terminal connection section	Screwdriver, etc.	No looseness	G NG				
	Fan motor electrical insulation	500-V megatester	1 MΩ or more	MΩ				
	Compressor electrical insulation	500-V megatester	1 MΩ or more	INV MΩ	STD1 MΩ	STD2 MΩ		
	Installation	Visual inspection	Short circuit, etc.	G NG				
Sub unit	Refrigerant piping system	Gas detector	No leaks	G NG				
	Heat exchanger	Visual inspection	No clogging or damage	G NG				
	Terminal connection section	Screwdriver, etc.	No looseness	G NG				
	Fan motor electrical insulation	500-V megatester	1 MΩ or more	MΩ				
	Installation	Visual inspection	Short circuit, etc.	G NG				
Indoor unit	Refrigerant system	Gas detector	No leaks	Room 1 G NG	Room 2 G NG	Room 3 G NG	Room 4 G NG	
				Room 5 G NG	Room 6 G NG	Room 7 G NG	Room 8 G NG	
				Room 9 G NG	Room 10 G NG	Room 11 G NG	Room 12 G NG	
				Room 13 G NG	Room 14 G NG	Room 15 G NG	Room 16 G NG	
				Room 17 G NG	Room 18 G NG	Room 19 G NG	Room 20 G NG	
				Room 21 G NG	Room 22 G NG	Room 23 G NG	Room 24 G NG	
				Room 25 G NG	Room 26 G NG	Room 27 G NG	Room 28 G NG	
				Room 29 G NG	Room 30 G NG	Room 31 G NG	Room 32 G NG	
	Air filter	Visual inspection	No clogging or damage	Room 1 G NG	Room 2 G NG	Room 3 G NG	Room 4 G NG	
				Room 5 G NG	Room 6 G NG	Room 7 G NG	Room 8 G NG	
				Room 9 G NG	Room 10 G NG	Room 11 G NG	Room 12 G NG	
				Room 13 G NG	Room 14 G NG	Room 15 G NG	Room 16 G NG	
				Room 17 G NG	Room 18 G NG	Room 19 G NG	Room 20 G NG	
				Room 21 G NG	Room 22 G NG	Room 23 G NG	Room 24 G NG	
				Room 25 G NG	Room 26 G NG	Room 27 G NG	Room 28 G NG	
				Room 29 G NG	Room 30 G NG	Room 31 G NG	Room 32 G NG	
	Heat exchanger	Visual inspection	No clogging or damage	Room 1 G NG	Room 2 G NG	Room 3 G NG	Room 4 G NG	
				Room 5 G NG	Room 6 G NG	Room 7 G NG	Room 8 G NG	
				Room 9 G NG	Room 10 G NG	Room 11 G NG	Room 12 G NG	
				Room 13 G NG	Room 14 G NG	Room 15 G NG	Room 16 G NG	
				Room 17 G NG	Room 18 G NG	Room 19 G NG	Room 20 G NG	
				Room 21 G NG	Room 22 G NG	Room 23 G NG	Room 24 G NG	
				Room 25 G NG	Room 26 G NG	Room 27 G NG	Room 28 G NG	
				Room 29 G NG	Room 30 G NG	Room 31 G NG	Room 32 G NG	
	Fan motor electrical insulation	500-V megatester	1 MΩ or more	Room 1 MΩ	Room 2 MΩ	Room 3 MΩ	Room 4 MΩ	
				Room 5 MΩ	Room 6 MΩ	Room 7 MΩ	Room 8 MΩ	
				Room 9 MΩ	Room 10 MΩ	Room 11 MΩ	Room 12 MΩ	
				Room 13 MΩ	Room 14 MΩ	Room 15 MΩ	Room 16 MΩ	
				Room 17 MΩ	Room 18 MΩ	Room 19 MΩ	Room 20 MΩ	
				Room 21 MΩ	Room 22 MΩ	Room 23 MΩ	Room 24 MΩ	
				Room 25 MΩ	Room 26 MΩ	Room 27 MΩ	Room 28 MΩ	
				Room 29 MΩ	Room 30 MΩ	Room 31 MΩ	Room 32 MΩ	
	Auxiliary heater electrical insulation	500-V megatester	1 MΩ or more	Room 1 MΩ	Room 2 MΩ	Room 3 MΩ	Room 4 MΩ	
				Room 5 MΩ	Room 6 MΩ	Room 7 MΩ	Room 8 MΩ	
				Room 9 MΩ	Room 10 MΩ	Room 11 MΩ	Room 12 MΩ	
				Room 13 MΩ	Room 14 MΩ	Room 15 MΩ	Room 16 MΩ	
				Room 17 MΩ	Room 18 MΩ	Room 19 MΩ	Room 20 MΩ	
				Room 21 MΩ	Room 22 MΩ	Room 23 MΩ	Room 24 MΩ	
				Room 25 MΩ	Room 26 MΩ	Room 27 MΩ	Room 28 MΩ	
				Room 29 MΩ	Room 30 MΩ	Room 31 MΩ	Room 32 MΩ	
	Installation	Visual inspection	Short circuit, etc.	Room 1 G NG	Room 2 G NG	Room 3 G NG	Room 4 G NG	
				Room 5 G NG	Room 6 G NG	Room 7 G NG	Room 8 G NG	
				Room 9 G NG	Room 10 G NG	Room 11 G NG	Room 12 G NG	
				Room 13 G NG	Room 14 G NG	Room 15 G NG	Room 16 G NG	
				Room 17 G NG	Room 18 G NG	Room 19 G NG	Room 20 G NG	
				Room 21 G NG	Room 22 G NG	Room 23 G NG	Room 24 G NG	
				Room 25 G NG	Room 26 G NG	Room 27 G NG	Room 28 G NG	
				Room 29 G NG	Room 30 G NG	Room 31 G NG	Room 32 G NG	

(V1092)

Все каталоги и инструкции здесь: https://splitsystema48.ru/instrukcii-po-ekspluatacii-kondicionerov.html

Si33-102.book Page 111 Tuesday, June 26, 2001 3:18 PM

During operation

System name

	Inspection item	Inspection method	Standard (guideline)	Measurement values			Decision
Main unit	Main power supply voltage	Tester	Rated voltage ±10%	R-S V	S-T V	R-T V	
	Operation circuit voltage	Tester	Rated voltage ±10%	V			
	Fan rotation direction	Visual inspection	Forward rotation	G NG			
	Fan noise/vibration	Listening	No noise or vibration				
	Fan operation current	Clamp meter		M1(11)F, M2(12)F, M21F, M22F A A A A			
	Suction air temperature	Thermometer	Temperature differential	˚C			
	Discharge air temperature	Thermometer	9~11˚C when cooling, 2~3.5˚C when heating	˚C			
	Compressor discharge pressure	Pressure gauge		INV Mpa			
				STD1 Mpa			
				STD2 Mpa			
	Compressor suction pressure	Pressure gauge		Mpa			
	Compressor operating current	Clamp meter	Phase differential within 1A	INV A			
				STD1 R( )A, S( )A, T( )A			
				STD2 R( )A, S( )A, T( )A			
	Compressor operating frequency	Clamp meter		INV Hz			
	Suction pipe temperature	Thermometer	3~15˚C	INV ˚C	STD1 ˚C	STD2 ˚C	
	Discharge pipe temperature	Thermometer	85~105˚C	INV ˚C	STD1 ˚C	STD2 ˚C	
	Crank case heater	Touch	Warm	INV G·NG			
				STD1 G·NG			
				STD2 G·NG			
Sub unit	Fan rotation direction	Visual inspection	Forward rotation	G NG			
	Fan noise/vibration	Listening	No noise or vibration				
	Fan operating current	Clamp meter		A			
	Suction air temperature	Thermometer	Temperature differential	˚C			
	Discharge air temperature	Thermometer	9~11˚C when cooling, 2~3.5˚C when heating	˚C			

(V1093)

Все каталоги и инструкции здесь: https://splitsystema48.ru/instrukcii-po-ekspluatacii-kondicionerov.html

Si33-102.book Page 112 Tuesday, June 26, 2001 3:18 PM

During operation

System name

	Inspection item	Inspection method	Standard (guideline)	Measurement values				Decision
Indoor unit	Power supply voltage	Tester	Rated voltage ±10%	Room 1 V	Room 2 V	Room 3 V	Room 4 V	
				Room 5 V	Room 6 V	Room 7 V	Room 8 V	
				Room 9 V	Room10 V	Room11 V	Room12 V	
				Room13 V	Room14 V	Room15 V	Room16 V	
				Room17 V	Room18 V	Room19 V	Room20 V	
				Room21 V	Room22 V	Room23 V	Room24 V	
				Room25 V	Room26 V	Room27 V	Room28 V	
				Room29 V	Room30 V	Room31 V	Room32 V	
	Suction air temperature	Thermometer	Temperature differential 9~13˚C when cooling, 15~20˚C when heating	Room 1 ˚C	Room 2 ˚C	Room 3 ˚C	Room 4 ˚C	
				Room 5 ˚C	Room 6 ˚C	Room 7 ˚C	Room 8 ˚C	
				Room 9 ˚C	Room10 ˚C	Room11 ˚C	Room12 ˚C	
				Room13 ˚C	Room14 ˚C	Room15 ˚C	Room16 ˚C	
				Room17 ˚C	Room18 ˚C	Room19 ˚C	Room20 ˚C	
				Room21 ˚C	Room22 ˚C	Room23 ˚C	Room24 ˚C	
				Room25 ˚C	Room26 ˚C	Room27 ˚C	Room28 ˚C	
				Room29 ˚C	Room30 ˚C	Room31 ˚C	Room32 ˚C	
	Discharge air temperature			Room 1 ˚C	Room 2 ˚C	Room 3 ˚C	Room 4 ˚C	
				Room 5 ˚C	Room 6 ˚C	Room 7 ˚C	Room 8 ˚C	
				Room 9 ˚C	Room10 ˚C	Room11 ˚C	Room12 ˚C	
				Room13 ˚C	Room14 ˚C	Room15 ˚C	Room16 ˚C	
				Room17 ˚C	Room18 ˚C	Room19 ˚C	Room20 ˚C	
				Room21 ˚C	Room22 ˚C	Room23 ˚C	Room24 ˚C	
				Room25 ˚C	Room26 ˚C	Room27 ˚C	Room28 ˚C	
				Room29 ˚C	Room30 ˚C	Room31 ˚C	Room32 ˚C	
	Fan rotation direction	Visual inspection	Forward rotation	Room 1 G NG	Room 2 G NG	Room 3 G NG	Room 4 G NG	
				Room 5 G NG	Room 6 G NG	Room 7 G NG	Room 8 G NG	
				Room 9 G NG	Room10 G NG	Room11 G NG	Room12 G NG	
				Room13 G NG	Room14 G NG	Room15 G NG	Room16 G NG	
				Room17 G NG	Room18 G NG	Room19 G NG	Room20 G NG	
				Room21 G NG	Room22 G NG	Room23 G NG	Room24 G NG	
				Room25 G NG	Room26 G NG	Room27 G NG	Room28 G NG	
				Room29 G NG	Room30 G NG	Room31 G NG	Room32 G NG	
	Fan noise / vibration	Listening	No noise or vibration	Room 1 G NG	Room 2 G NG	Room 3 G NG	Room 4 G NG	
				Room 5 G NG	Room 6 G NG	Room 7 G NG	Room 8 G NG	
				Room 9 G NG	Room10 G NG	Room11 G NG	Room12 G NG	
				Room13 G NG	Room14 G NG	Room15 G NG	Room16 G NG	
				Room17 G NG	Room18 G NG	Room19 G NG	Room20 G NG	
				Room21 G NG	Room22 G NG	Room23 G NG	Room24 G NG	
				Room25 G NG	Room26 G NG	Room27 G NG	Room28 G NG	
				Room29 G NG	Room30 G NG	Room31 G NG	Room32 G NG	
	Fan operating current	Clamp meter		Room 1 A	Room 2 A	Room 3 A	Room 4 A	
				Room 5 A	Room 6 A	Room 7 A	Room 8 A	
				Room 9 A	Room10 A	Room11 A	Room12 A	
				Room13 A	Room14 A	Room15 A	Room16 A	
				Room17 A	Room18 A	Room19 A	Room20 A	
				Room21 A	Room22 A	Room23 A	Room24 A	
				Room25 A	Room26 A	Room27 A	Room28 A	
				Room29 A	Room30 A	Room31 A	Room32 A	

(V1094)

Все каталоги и инструкции здесь: https://splitsystema48.ru/instrukcii-po-ekspluatacii-kondicionerov.html

Si33-102.book Page 113 Tuesday, June 26, 2001 3:18 PM

7.6 Piping System Diagrams

7.6.1 Indoor Unit

FXYC, FXYF, FXYK, FXYD, FXYS, FXYB, FXYM, FXYH, FXYA, FXYL, FXYLM

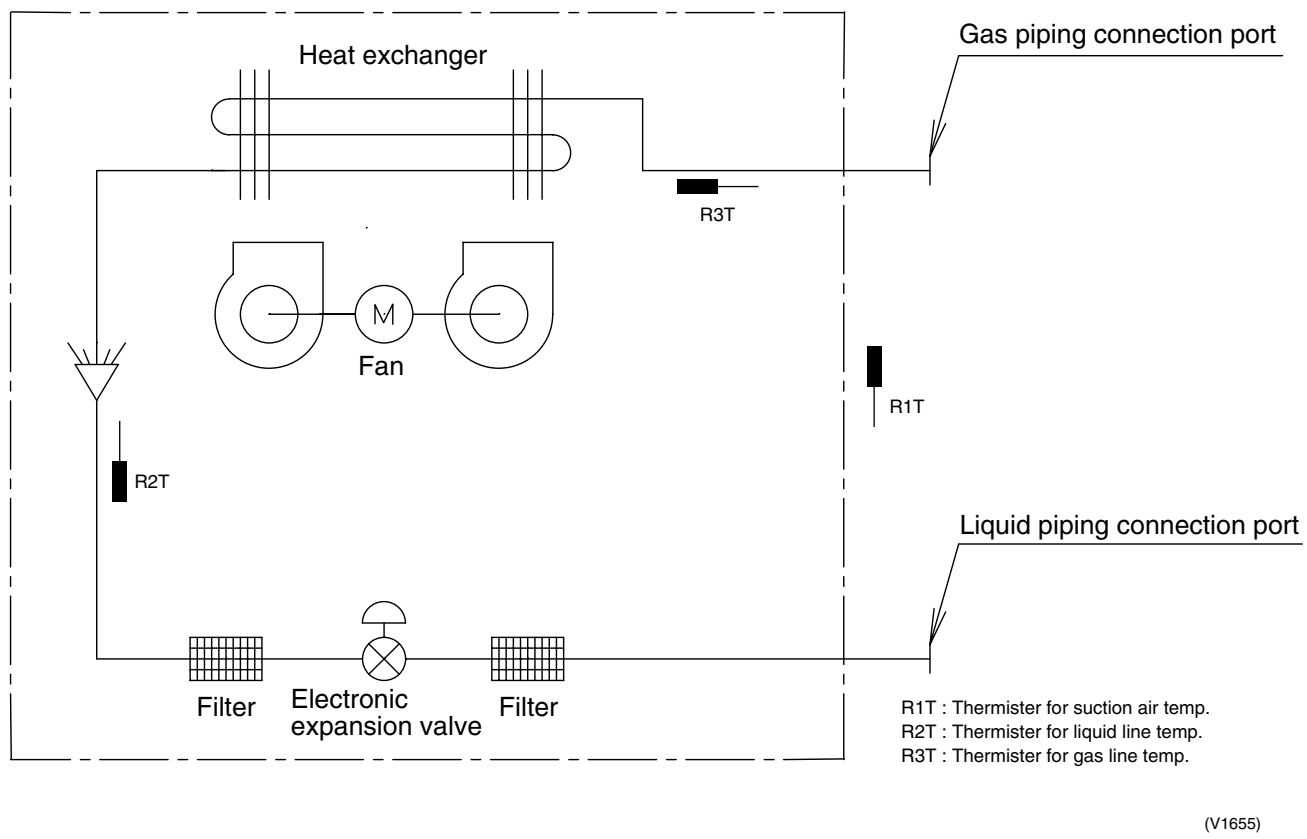

■ Refrigerant pipe connection port diameters

(mm)

Model	Gas	Liquid
FXYC20K / 25K / 32K / 40K FXYF25KB / 32KB / 40KB FXYK25K / 32K / 40K FXYD20KAVE / 25KAVE / 32KAVE / 40KAVE FXYS20K / 25K / 32K / 40K FXYB20K / 25K / 32K / 40K FXYM40K / 50K FXYH32K FXYA25K / 32K / 40K FXYL20KJ / 25KJ / 32KJ / 40KJ FXYLM20KJ / 25KJ / 32KJ / 40KJ	ϕ12.7	ϕ6.4
FXYC50K / 63K / 80K FXYF50KB / 63KB / 80KB FXYK63K FXYD50KAVE / 63KAVE FXYS50K / 63K / 80K FXYB50K / 63K / 80K FXYM63K / 80K / 100K FXYH63K FXYA50K / 63K FXYL50KJ / 63KJ FXYLM50KJ / 63KJ	ϕ15.9	ϕ9.5
FXYC125K FXYF100KB / 125KB FXYS100 K / 125K FXYB100K / 125K FXYM125K FXYH100K	ϕ19.1	
FXYM200KJ	ϕ25.4	ϕ12.7
FXYM250KJ	ϕ28.6	

Все каталоги и инструкции здесь: https://splitsystema48.ru/instrukcii-po-ekspluatacii-kondicionerov.html

Si33-102.book Page 114 Tuesday, June 26, 2001 3:18 PM

7.6.2 Outdoor Units

RSXY16·18·20KAY1(E) / YAL(E)

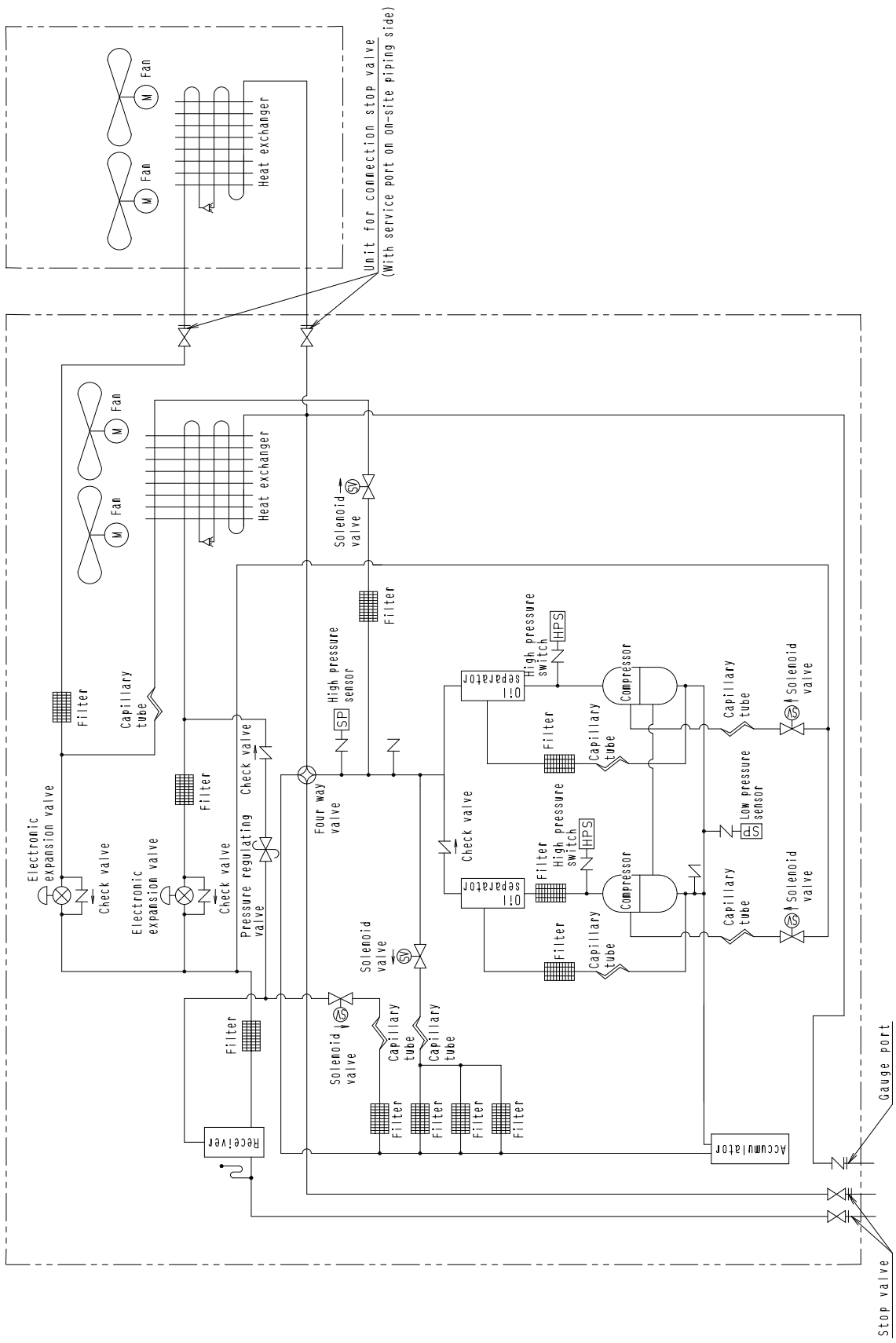

Все каталоги и инструкции здесь: https://splitsystema48.ru/instrukcii-po-ekspluatacii-kondicionerov.html

Si33-102.book Page 115 Tuesday, June 26, 2001 3:18 PM

RSXY24·26·28·30KAY1(E) / YAL(E)

3D028581

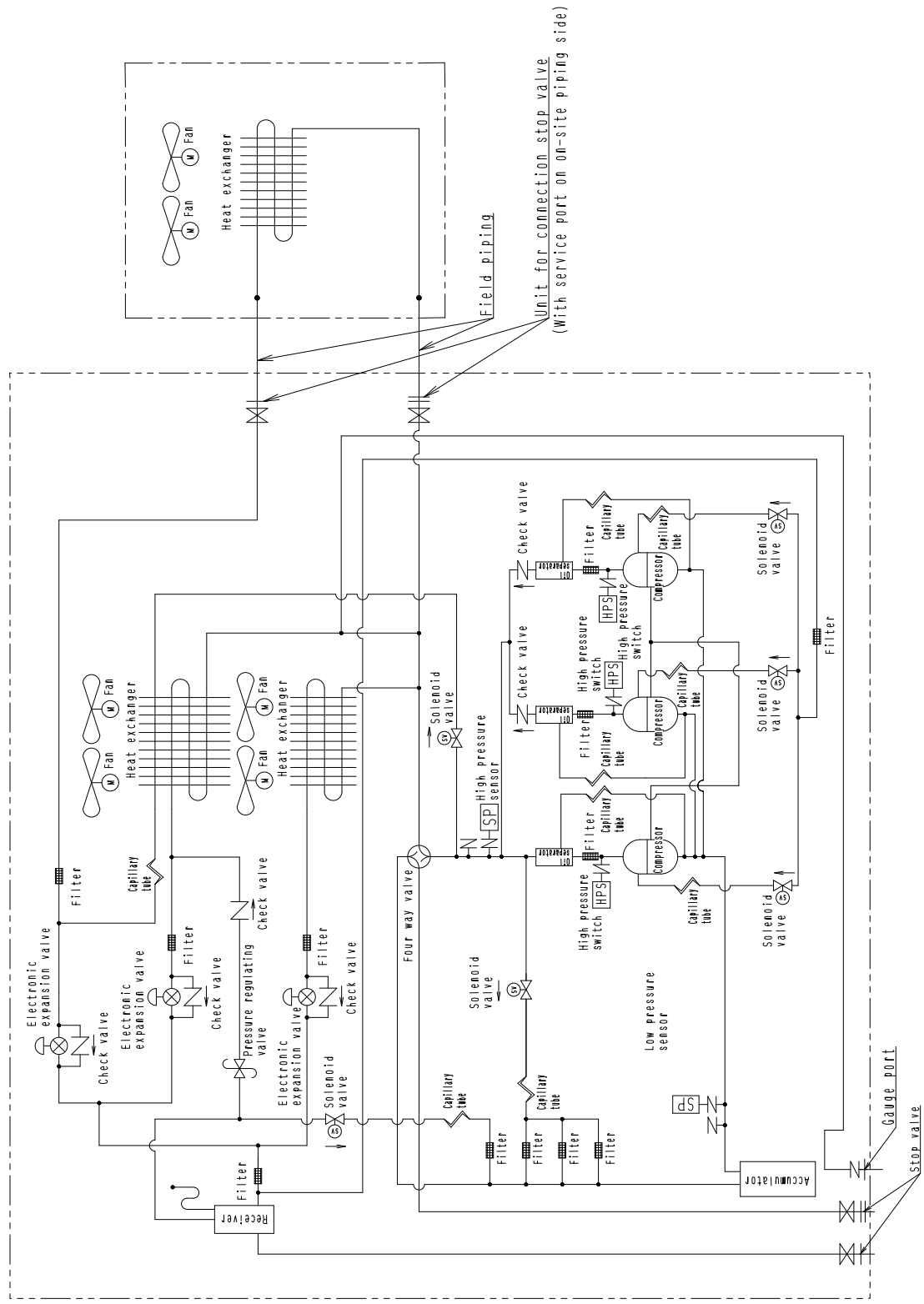

Все каталоги и инструкции здесь: https://splitsystema48.ru/instrukcii-po-ekspluatacii-kondicionerov.html

Si33-102.book Page 116 Tuesday, June 26, 2001 3:18 PM

7.7 Wiring Diagrams

7.7.1 Outdoor Units

RSXY16·18·20KAY1(E) / YAL(E)

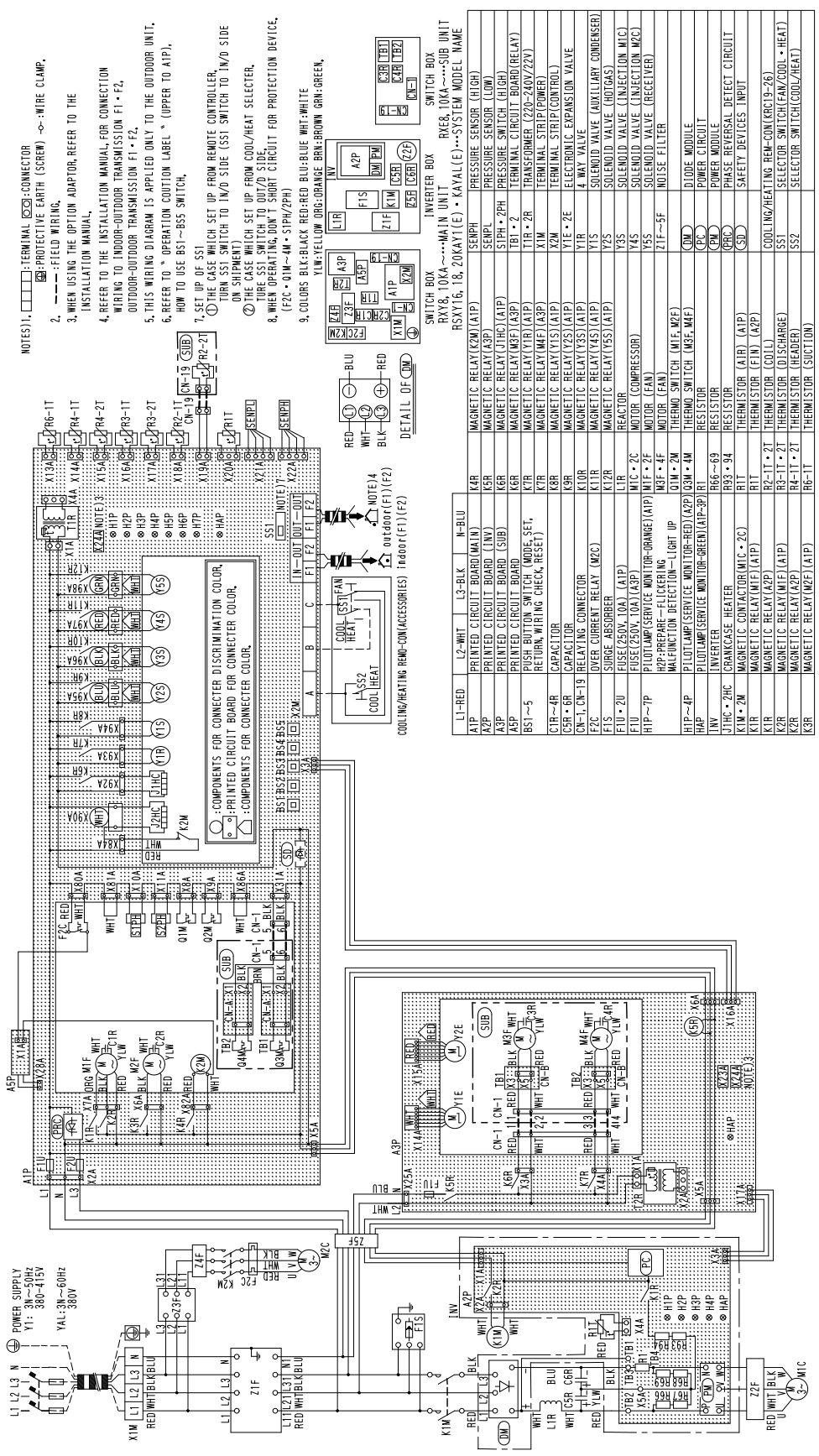

Все каталоги и инструкции здесь: https://splitsystema48.ru/instrukcii-po-ekspluatacii-kondicionerov.html

Si33-102.book Page 117 Tuesday, June 26, 2001 3:18 PM

RSXY24·26·28·30KAY1(E) / YAL(E)

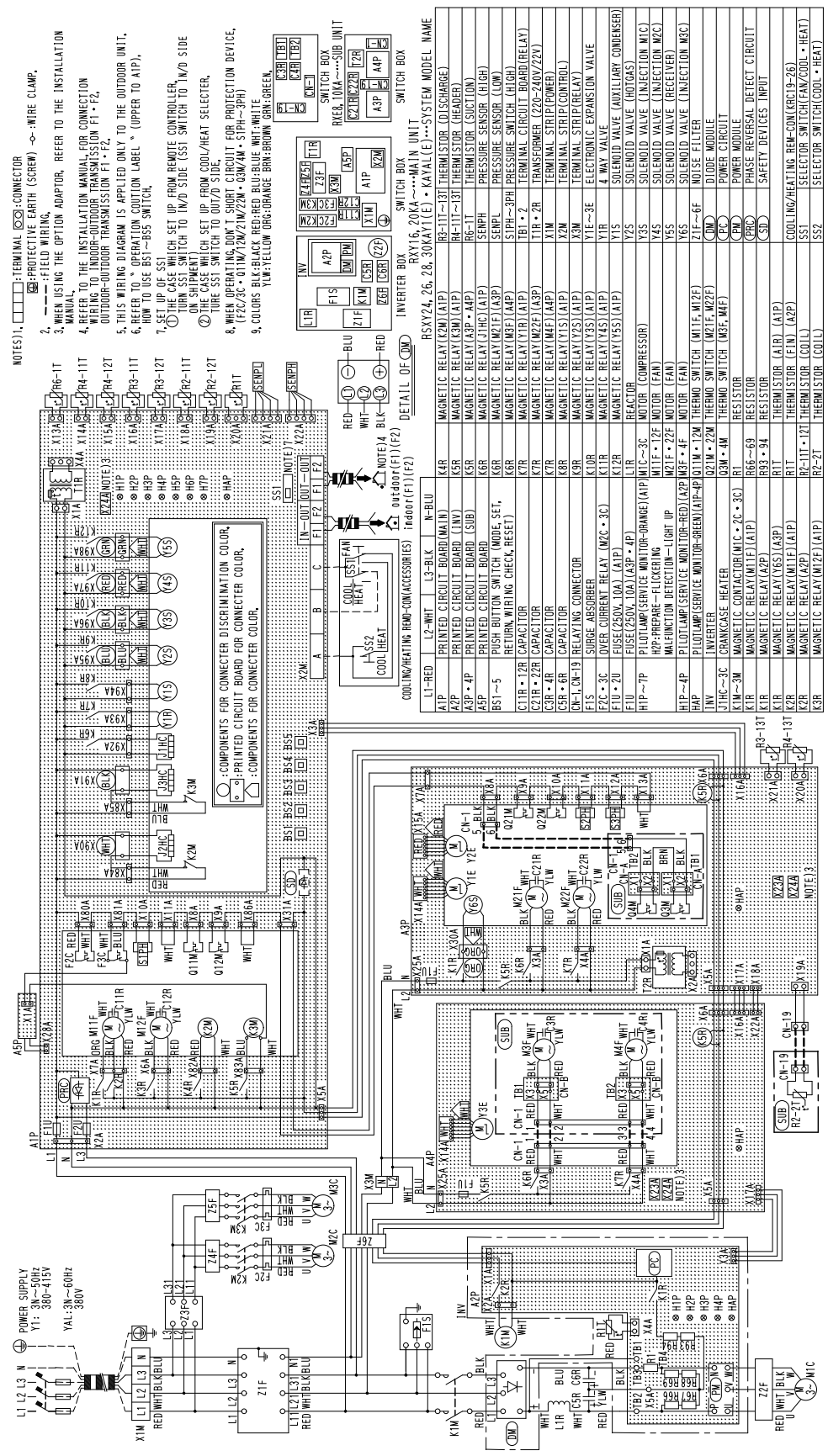

	L1-RED	L2-WHT	L3-BLK	N-BLU
A1P	PRINTED CIRCUIT BOARD(MAIN)			
A2P	PRINTED CIRCUIT BOARD (INV)			
A3P·4P	PRINTED CIRCUIT BOARD (SUB)			
A5P	PRINTED CIRCUIT BOARD			
B51~5	PUSH BUTTON SWITCH (MODE SET, RETURN, WIRING CHECK, RESET)			
C11R·12R	CAPACITOR			
C21R·22R	CAPACITOR			
C3R·4R	CAPACITOR			
C5R·6R	CAPACITOR			
CN-1, CN-19	RELAYING CONNECTOR			
F1S	SURGE ABSORBER			
F2C·3C	OVER CURRENT RELAY (M2C·3C)			
F1U·2U	FUSE(250V, 10A) (A1P)			
F1U	FUSE(250V, 10A)(A3P·4P)			
H1P~7P	PILOTLAMP(SERVICE MONITOR-ORANGE)(A1P) H2P:PREPARE-FLICKERING MALFUNCTION DETECTION-LIGHT UP			
H1P~4P	PILOTLAMP(SERVICE MONITOR-RED)(A2P)			
HAP	PILOTLAMP(SERVICE MONITOR-GREEN)(A1P~4P)			
INV	INVERTER			
J1HC~3C	CRANKCASE HEATER			
K1M~3M	MAGNETIC CONTACTOR(M1C·2C·3C)			
K1R	MAGNETIC RELAY(M1F)(A1P)			
K1R	MAGNETIC RELAY(A2P)			
K1R	MAGNETIC RELAY(Y6S)(A3P)			
K2R	MAGNETIC RELAY(M1F)(A1P)			
K2R	MAGNETIC RELAY(A2P)			
K3R	MAGNETIC RELAY(M1F)(A1P)			

K4R	MAGNETIC RELAY(K2M)(A1P)	R3-11T~13T THERMISTOR (DISCHARGE)
K5R	MAGNETIC RELAY(K3M)(A1P)	R4-11T~13T THERMISTOR (HEADER)
K5R	MAGNETIC RELAY(A3P·4P)	R6-1T THERMISTOR (SUCTION)
K6R	MAGNETIC RELAY(J1HC)(A1P)	S6NPH PRESSURE SENSOR (HIGH)
K6R	MAGNETIC RELAY(M2F)(A2P)	S6NPL PRESSURE SENSOR (LOW)
K6R	MAGNETIC RELAY(M3F)(A4P)	S1PH~3PH PRESSURE SWITCH (HIGH)
K7R	MAGNETIC RELAY(Y1R)(A1P)	TB1·2 TERMINAL CIRCUIT BOARD(RELAY)
K7R	MAGNETIC RELAY(M22F)(A3P)	T1R·2R TRANSFORMER (220~240V/22V)
K7R	MAGNETIC RELAY(M4F)(A4P)	X1M TERMINAL STRIP(POWER)
K8R	MAGNETIC RELAY(Y1S)(A1P)	X2M TERMINAL STRIP(CONTROL)
K9R	MAGNETIC RELAY(Y2S)(A1P)	X3M TERMINAL STRIP(RELAY)
K10R	MAGNETIC RELAY(Y3S)(A1P)	Y1E~3E ELECTRONIC EXPANSION VALVE
K11R	MAGNETIC RELAY(Y4S)(A1P)	Y1R 4 WAY VALVE
K12R	MAGNETIC RELAY(Y5S)(A1P)	Y1S SOLENOID VALVE (AUXILIARY CONDENSER)
L1R	REACTOR	Y2S SOLENOID VALVE (HOTGAS)
M1C~3C	MOTOR (COMPRESSOR)	Y3S SOLENOID VALVE (INJECTION M1C)
M1F·22F	MOTOR (FAN)	Y4S SOLENOID VALVE (INJECTION M2C)
M23F·4F	MOTOR (FAN)	Y5S SOLENOID VALVE (RECEIVER)
Q1M·12M	THERMO SWITCH (M1F, M2F)	Y6S SOLENOID VALVE (INJECTION M3C)
Q21M·22M	THERMO SWITCH (M3F, M4F)	Z1F~6F NOISE FILTER
Q3M·4M	THERMO SWITCH (M23F, M24F)	CN DIODE MODULE
R1	RESISTOR	PC POWER CIRCUIT
R66~69	RESISTOR	CM POWER MODULE
R93·94	RESISTOR	PHC PHASE REVERSAL DETECT CIRCUIT
R1T	THERMISTOR (AIR)	SD SAFETY DEVICES INPUT
R1T	THERMISTOR (FIN)	
R2-11T·12T	THERMISTOR (COIL)	
R2-2T	THERMISTOR (COIL)	

3D028486A

Все каталоги и инструкции здесь: https://splitsystema48.ru/instrukcii-po-ekspluatacii-kondicionerov.html

Si33-102.book Page 118 Tuesday, June 26, 2001 3:18 PM

7.8 Bad Examples and Good Examples in Installation

7.8.1 Example 1: Signal interference due to use of multiple core cable (all model)

Situation

Although for the purposes of group control there are only 2 units per group there are transmission malfunctions between the indoor units and the remote control and the remote control's address display is showing non-existent addresses such as 13 or 15.

Source of Problem and Remedial Action

Multiple core cable has been used for at least part of the interconnecting wiring between the remote control and the indoor units.
This has resulted in signal interference leading to a transmission malfunction.

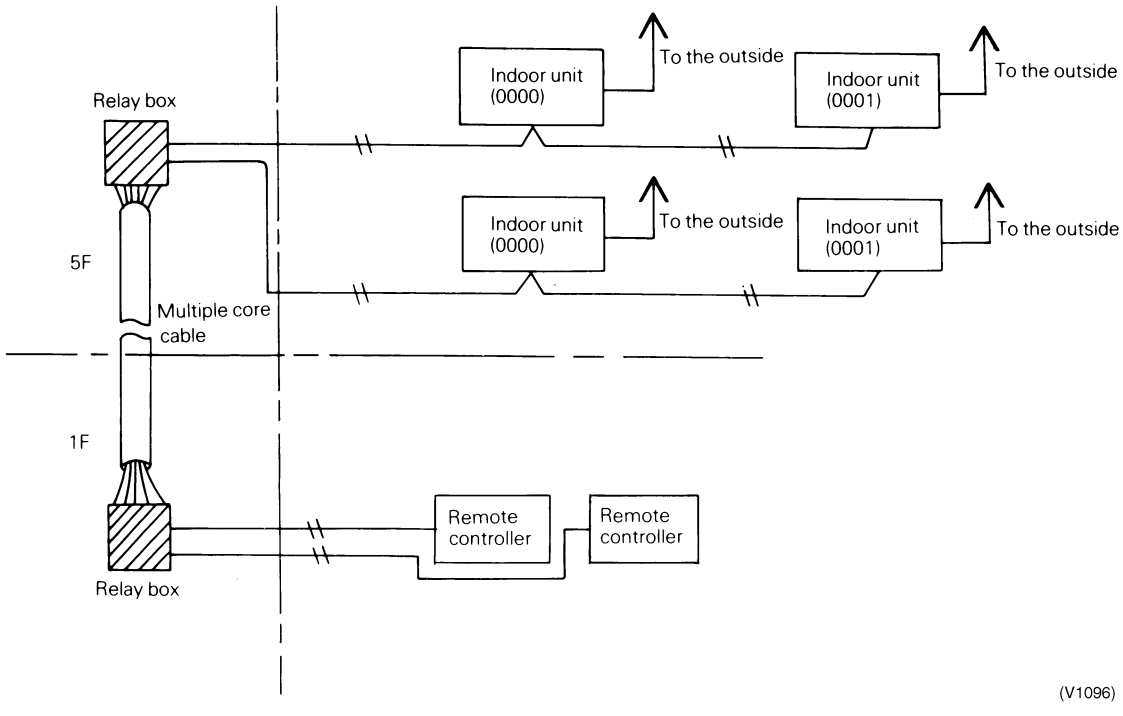

The multiple core cable was replaced by twin core cable and the fault disappeared.

Main Points

- Although twin core cable had been run from each unit, multiple core cable was used on the way.
- In schools, etc., because remote controls are often installed in a single first floor control room, it is easier to use a multi-core cable.
- Signal interference can result in non-existent addresses appearing on the display.

Все каталоги и инструкции здесь: https://splitsystema48.ru/instrukcii-po-ekspluatacii-kondicionerov.html

Si33-102.book Page 119 Tuesday, June 26, 2001 3:18 PM

7.8.2 Example 2: Mismatch between cables connecting indoor and outdoor units and corresponding piping. (all model)

Situation

The remote control is not showing any malfunction and the system is operating but there is no flow of warm air from the indoor unit (in heating mode).

Source of Problem and Remedial Action

The connecting cables and the corresponding piping were not correctly matched.
Recabling was carried out and the fault disappeared.

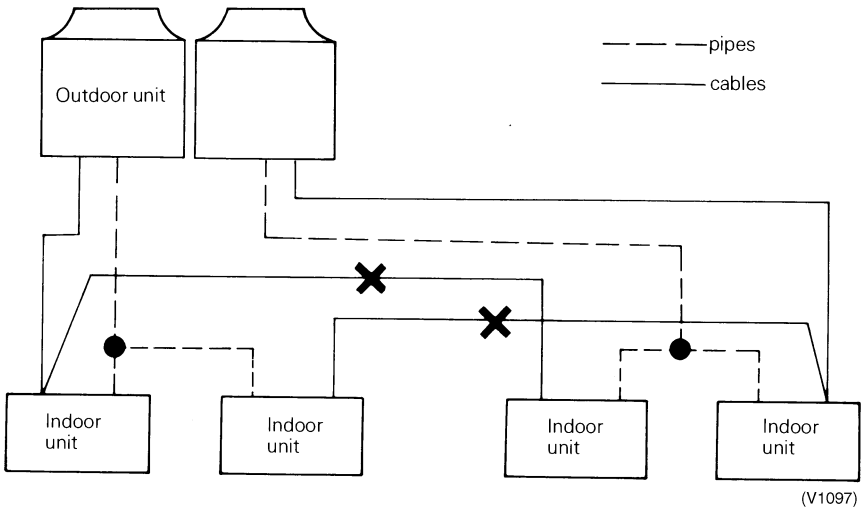

Main Points

- Special care must be taken when the pipework and cabling are carried out by different people.
- Run each indoor unit in turn to check that the system is correctly matched.

Все каталоги и инструкции здесь: https://splitsystema48.ru/instrukcii-po-ekspluatacii-kondicionerov.html

Si33-102.book Page 120 Tuesday, June 26, 2001 3:18 PM

7.8.3 Example 3: Drain pipe trap shape defective

Situation

Indoor unit was fitted with a drain trap but a leak occurred during subsequent operation.

Source of Problem and Remedial Action

The trap was not properly shaped thus preventing it from functioning effectively as a trap and resulting in drain leakage. The trap was reshaped and the fault disappeared.

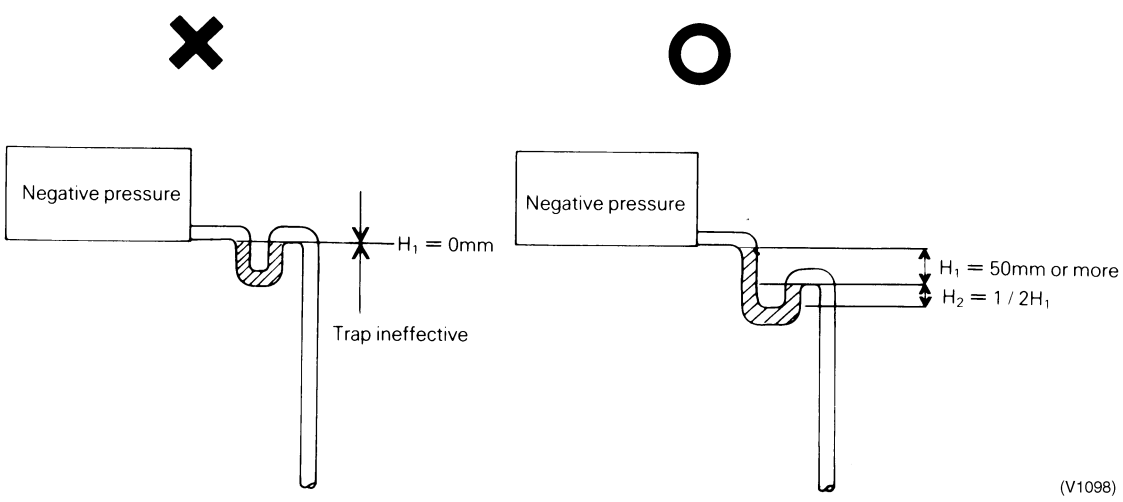

Main Points

■ Duct types (40~125) require a drain trap.

Reason:There is resistance on the air inlet side caused by the heat exchanger and air filter and this in turn creates negative pressure in relation to the atmospheric pressure on the discharge side. If there is no drain trap then air will be drawn in from the drain pipe and the waste water splashed around giving rise to the risk of water overflowing from the drain pan. To avoid this problem it is therefore necessary to design a trap which takes account of the maximum negative pressure which is likely to be created on the suction side.

Все каталоги и инструкции здесь: https://splitsystema48.ru/instrukcii-po-ekspluatacii-kondicionerov.html

Si33-102.book Page 121 Tuesday, June 26, 2001 3:18 PM

7.8.4 Example 4: Pressure down despite absence of leaks during air tight test (all model)

Situation

In order to carry out local air tight tests on the refrigerant piping the system was pressurized (3.33KPa) via the liquid pipe service port and after 24 hours the pressure was found to have fallen. The local refrigerant piping alone does not lose any pressure. Maybe the gas leak is supposed to be located in the indoor unit itself.

Source of Problem and Remedial Action

The system was pressurized from the liquid pipe side and the gas pipes were therefore not pressurized. The system was then left under pressure for 24 hours but during that time gas leaked through into the gas pipes due to internal leaks within the solenoid and check valves and the gas pressure inside the liquid pipes consequently dropped.

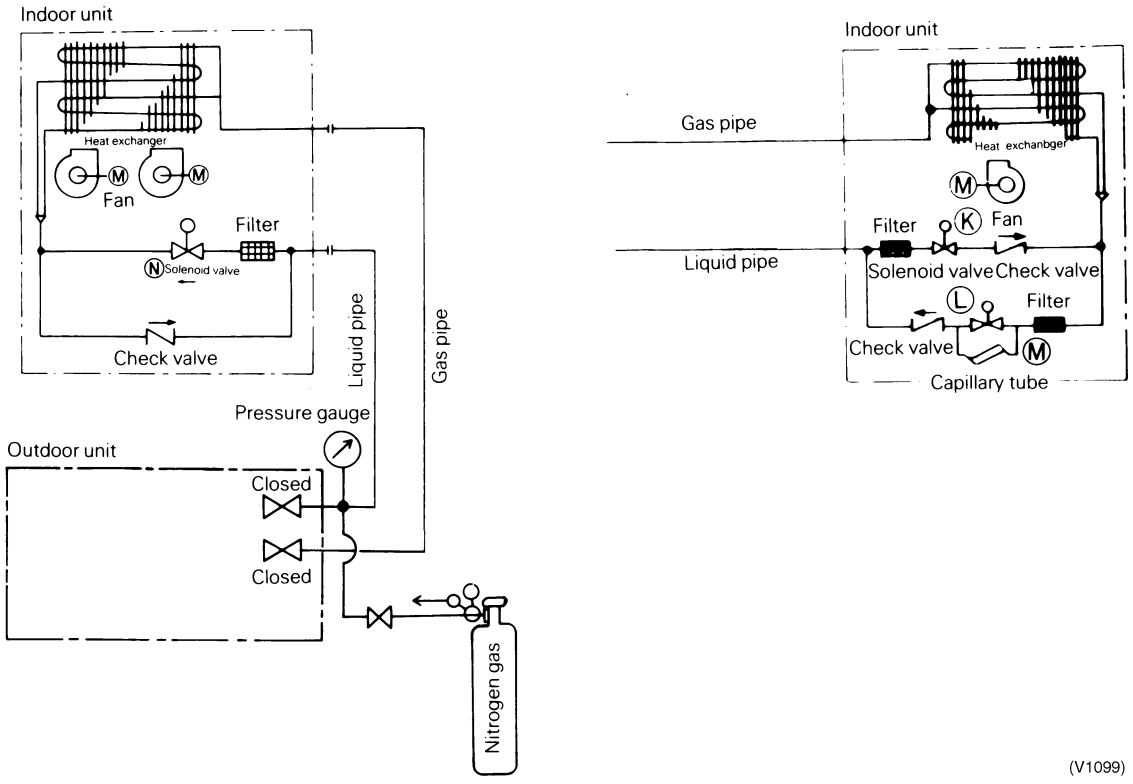

Main Points

When carrying out air tight tests on local pipework **it is essential that the system be pressurized via both the liquid pipes and the gas pipes**.

Все каталоги и инструкции здесь: https://splitsystema48.ru/instrukcii-po-ekspluatacii-kondicionerov.html

Si33-102.book Page 122 Tuesday, June 26, 2001 3:18 PM

7.8.5 Example 5: Excessive noise due to incorrect angling of REFNET joints

Situation

The noise of the refrigerant flow during defrosing is excessive.

Source of Problem and Remedial Action

The angle of the fittings was incorrect and needed to be rectified as shown in the following figure.

1. REFNET joints
   The REFNET joints should be installed such that branches meet the main pipe either horizontally or vertically at an angle of exactly 90 degrees.

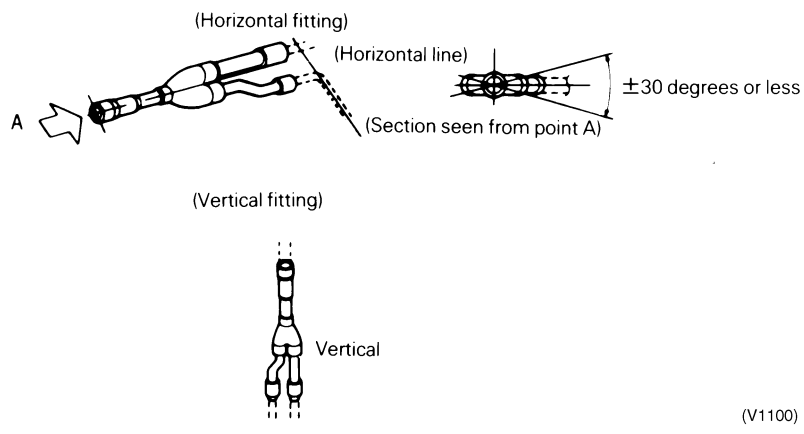

2. REFNET header
   The REFNET header is a lateral flow pipe and should be fitted so as to allow horizontal branch fittings. (Vertical or sloping fitting is not permissible.)

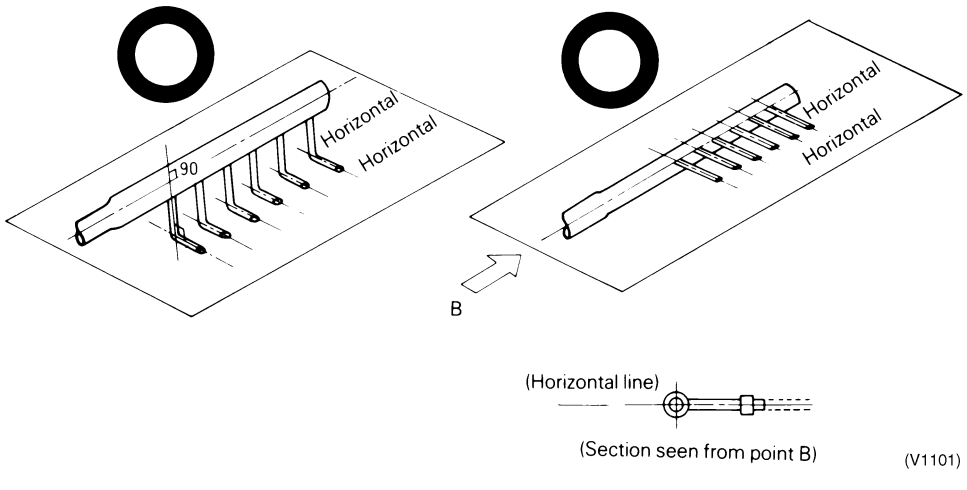

Main Points

- Reasons for using refrigerant branch kit
  Fittings of REFNET joints or headers which are not carried out in strict accordance with the principles outlined here may result in complaints relating, for example, to “poor performance” of the system or “noisy refrigerant flow”. (To prevent unbalance flow or oil shortage)

Все каталоги и инструкции здесь: https://splitsystema48.ru/instrukcii-po-ekspluatacii-kondicionerov.html

Si33-102.book Page 123 Tuesday, June 26, 2001 3:18 PM

7.8.6 Example 6: Cracks develop in field pipes due to thermal expansion and contraction

Situation

Refrigerant piping has developed cracks in soldered points and is leaking gas.

Cause

Both ends of the pipe have been tightly fixed in place.
↓
Starting and stopping the compressor has caused temperature to vary, thus the pipes have expanded and contracted which places stress on soldered parts.
↓
Cracks have formed because of repeated expansion and contraction.

Remedial Action

Fit the pipe with a loop as shown in the below drawing.

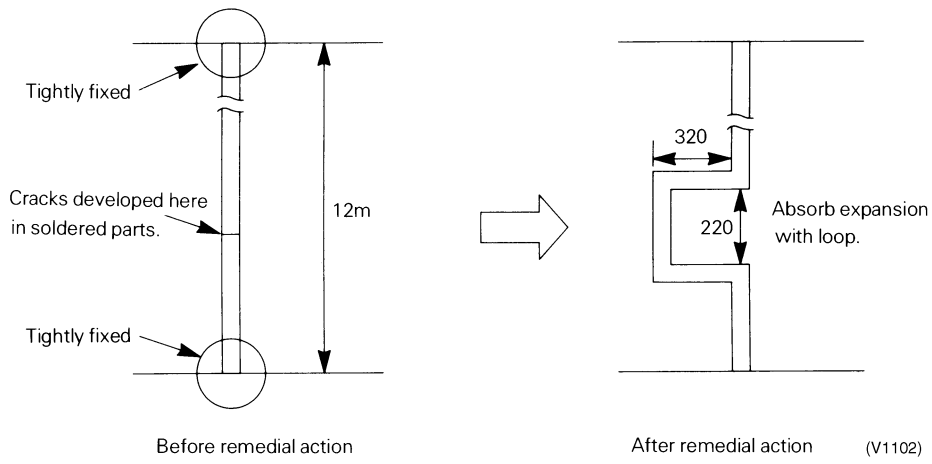

Main Points

- Take thermal expansion and contraction along the spline into consideration when installing pipe supports.

For Your Reference

Expansion (m) = Full length × Coefficient of thermal expansion × Rise in temperature
Coefficient of thermal expansion for copper: 16.5×10^{-6}

Example For a pipe length of 10 m and a rise in temperature of 50˚C, expansion reaches 8.2 mm.

Все каталоги и инструкции здесь: https://splitsystema48.ru/instrukcii-po-ekspluatacii-kondicionerov.html

Si33-102.book Page 124 Tuesday, June 26, 2001 3:18 PM

7.8.7 Example 7: Transmission wiring between the cool/heat selector and the outdoor unit is too close to a high voltage wire.

Situation

Heating is indicated despite having selected cooling with the cool/heat selector.

Cause and Remedial Action

The transmission wiring between the cool/heat selector and the outdoor unit is too close to a high voltage wire. An induced voltage is, therefore, being impressed on the transmission wiring which is causing a heating/cooling malfunction in the outdoor unit PC board.

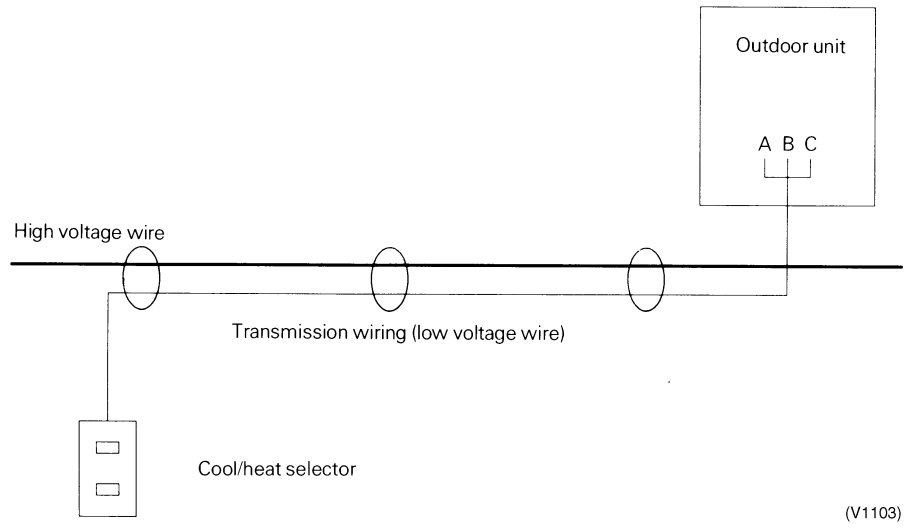

Bypassing the transmission wiring will allow the unit to function normally.

Main Points

- Keep low and high voltage wiring away from each another.

7.8.8 Example 8: The centralized control group number cannot be set (Inverter K Series).

Situation

An attempt was made to set the centralized control group number with the indoor unit remote control, but “00” cannot be selected in the field setting mode.

Cause

1. The central remote control or unified ON/OFF control is OFF.
2. The central remote control or unified ON/OFF control, or indoor unit is not wired to the centralized control line (F1 & F2).

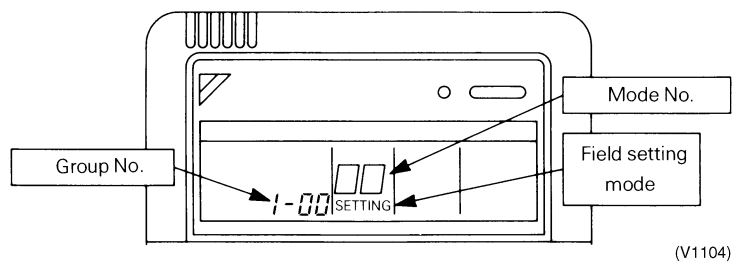

Remedial Action

Supply power to either the central remote control or unified ON/OFF control.
Wire the central remote control or unified ON/OFF control, or indoor unit to the centralized control line.

Main Points

- When communications with the central remote control are down, “00” cannot be selected in the field setting mode.
- Activate power to the central remote control, unified ON/OFF control and indoor unit before setting the centralized control group number.

7.8.9 Example 9: “88” cannot be cleared from the central remote control.

Все каталоги и инструкции здесь: https://splitsystema48.ru/instrukcii-po-ekspluatacii-kondicionerov.html

Si33-102.book Page 125 Tuesday, June 26, 2001 3:18 PM

Situation

The display on the central remote control does not change from its initial state after turning power ON.

Initial display of the central remote control

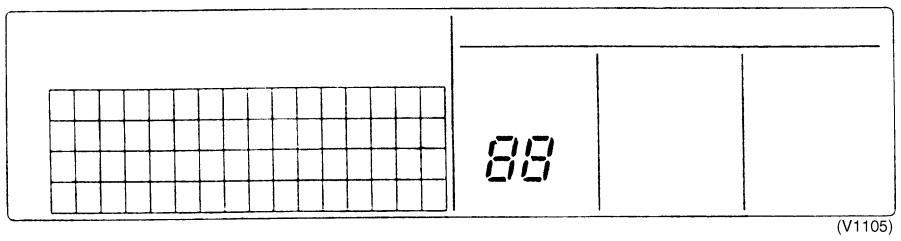

Cause

1. None of the indoor units connected to the central remote control have been given a group No.
2. The connector for setting the master control inside the central remote control is disconnected.

Remedial Action

- Set a centralized control group No. for each indoor unit with the respective remote controls.
- Connect the connector for setting the master control in one of the central remote control.

Main Points

- If the setting for master control has been changed, reset the power to the unit at the ON/OFF switch or the forced reset switch of the control.
- Activate power to the central remote control, unified ON/OFF control and indoor unit before setting the centralized control group No.
- For details on how to set the centralized control group number, refer to the installation manual.

Все каталоги и инструкции здесь: https://splitsystema48.ru/instrukcii-po-ekspluatacii-kondicionerov.html

Si33-102.book Page 126 Tuesday, June 26, 2001 3:18 PM

Все каталоги и инструкции здесь: https://splitsystema48.ru/instrukcii-po-ekspluatacii-kondicionerov.html

Si33-102.book Page 127 Tuesday, June 26, 2001 3:18 PM

Part 2
Installation Manual

1. Introduction 128
   1.1 Introduction..... 128
   1.2 Cautions in Installation 129
   1.3 Combination 130
   1.4 Standard Operation Limit..... 131
   1.5 Standard Supplied Accessories..... 132
   1.6 Optional Accessories..... 134
   1.7 Technical Specifications..... 135
   1.8 Electrical Specifications..... 136
2. Main Components 137
   2.1 Main Components 137
3. Selection of Location.....138
   3.1 Selection of Location 138
4. Inspecting and Handling the Unit 139
   4.1 Inspecting and Handling the Unit..... 139
5. Unpacking and Placing the Unit 140
   5.1 Unpacking and Placing the Unit 140
6. Refrigerant Piping 141
   6.1 Refrigerant Piping..... 141
   6.2 Selection of Piping Material..... 142
   6.3 Connecting the Refrigerant Piping..... 143
   6.4 Leak Test and Vacuum Drying 148
   6.5 Pipe Insulation 149
   6.6 Additional Refrigerant Charge 150
7. Field Wiring 151
   7.1 Field Wiring..... 151
   7.2 Internal Wiring – Parts Table 152
   7.3 Optional Parts Cool/Heat Selector..... 154
   7.4 Power Circuit and Cable Requirements 155
   7.5 General..... 156
   7.6 Examples..... 157
8. Before Operation.....163
   8.1 Checks before Initial Start-Up..... 163
   8.2 Test Run 164
9. Caution for Refrigerant Leaks 167
   9.1 Caution for Refrigerant Leaks..... 167
10. Appendix of Installation 169
   10.1 Example of Connection 169

Все каталоги и инструкции здесь: https://splitsystema48.ru/instrukcii-po-ekspluatacii-kondicionerov.html

Si33-102.book Page 128 Tuesday, June 26, 2001 3:18 PM

1. Introduction

1.1 Introduction

This installation manual concerns VRV plus series, RSXY. These units are designed for outdoor installation and used for cooling and heatpump applications. The units are available in 7 standard sizes with nominal cooling capacities ranging from 44.8 to 84.0kW and nominal heating capacities ranging from 50.0 to 94.5kW.

The RSXY units can be combined with Daikin VRV series indoor units for air conditioning purposes.

The present installation manual describes the procedures for unpacking, installing and connecting the RSXY units. Installation of the indoor units is not described in this manual. Always refer to the installation manual supplied with these units for their installation.

Все каталоги и инструкции здесь: https://splitsystema48.ru/instrukcii-po-ekspluatacii-kondicionerov.html

Si33-102.book Page 129 Tuesday, June 26, 2001 3:18 PM

1.2 Cautions in Installation

Caution 1 Read this manual attentively before starting up the unit. Do not throw it away. Keep it in your files for future reference.

Caution 2 Improper installation or attachment of equipment or accessories could result in electric shock, short-circuit, leaks, fire or other damage to the equipment. Be sure only to use accessories made by DAIKIN which are specifically designed for use with the equipment and have them installed by a professional.
If unsure of installation procedures or use, always contact your DAIKIN dealer for advice and information.

Все каталоги и инструкции здесь: https://splitsystema48.ru/instrukcii-po-ekspluatacii-kondicionerov.html

Si33-102.book Page 130 Tuesday, June 26, 2001 3:18 PM

1.3 Combination

The combination with indoor units is as follows:

- The possible combination of the outdoor unit with indoor units is in function of the total capacity index of these indoor units and must be within the range as specified below:

Outdoor Unit	
RSXY16 < RXY8 + RXE8 >	200 - 520
RSXY18 < RXY10 + RXE8 >	225 - 585
RSXY20 < RXY10 + RXE10 >	250 - 650
RSXY24 < RXY16 + RXE8 >	300 - 780
RSXY26 < RXY16 + RXE10 >	325 - 845
RSXY28 < RXY20 + RXE8 >	350 - 910
RSXY30 < RXY20 + RXE10 >	375 - 975

- Up to 20 indoor units can be connected to 1 outdoor unit RSXY16,18 and 20.
  Up to 32 indoor units can be connected to 1 outdoor unit RSXY24,26,28 and 30.
- Refer to the catalogue and/or engineering data book for model numbers of indoor units which can be connected.

Все каталоги и инструкции здесь: https://splitsystema48.ru/instrukcii-po-ekspluatacii-kondicionerov.html

Si33-102.book Page 131 Tuesday, June 26, 2001 3:18 PM

1.4 Standard Operation Limit

The figures below assume following operating conditions for indoor and outdoor units:
Equivalent pipe length.....5m
Level difference.....0m

Cooling

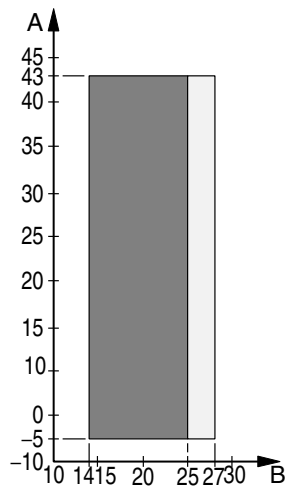

Heating

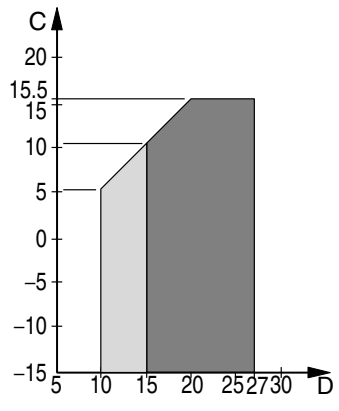

(V0888)

A	Outdoor temperature (˚CDB)
B	Indoor temperature (˚CWB)
C	Outdoor temperature (˚CWB)
D	Indoor temperature (˚CDB)
▇	Range for continuous operation
▭	Range for pull down operation
▭	Range for warming up operation

Все каталоги и инструкции здесь: https://splitsystema48.ru/instrukcii-po-ekspluatacii-kondicionerov.html

Si33-102.book Page 132 Tuesday, June 26, 2001 3:18 PM

1.5 Standard Supplied Accessories

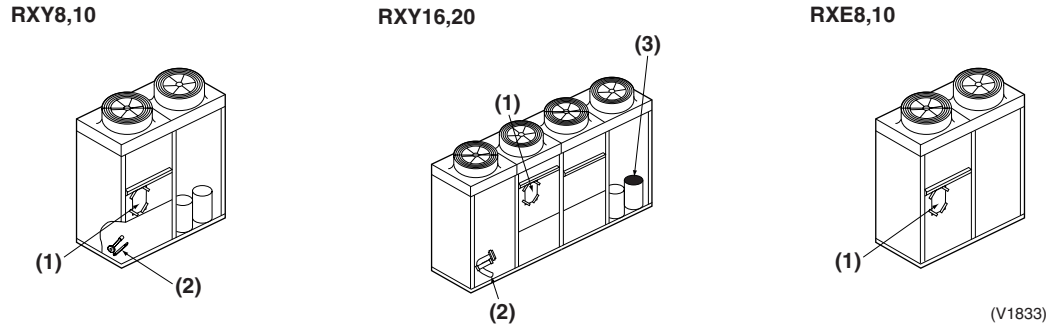

Accessories are attached in the main unit , RXY.

RSXY16,18,20

Tie-Wrap (1)	9	(V0889)
Gas Side Attached Pipe (2) (for connecting main and sub unit)	1	(V0890)
Gas Side Attached Pipe (2)	1	(V0892)
Gas Side Attached Pipe (2) (for bottom piping)	1	(V0893)
Connection Cable : Low Voltage (2)	1	(V0894)
Connection Cable : High Voltage (2)	1	(V0895)
Installation Manual (1)	1	
Operation Manual (1)	1	
Product Quality Certificate (1)	1	(only KAY1(E))

RSXY24,26,28,30

Tie-Wrap (1)	11	(V0889)
Gas Side Attached Pipe (2) (for connecting main and sub unit)	1	(V0890)
Gas Side Attached Pipe (2) (for connecting main and sub unit)	1	(V0893)
Gas Side Attached Pipe (2) (for front-piping)	1	(V0896)
Liquid Side Attached Pipe (2) (for front-piping) Do not use for RSXYP24	1	(V0897)
Connection Cable : Low Voltage (3)	1	(V0894)
Connection Cable : High Voltage (3)	1	(V0895)
Installation Manual (1)	1	
Operation Manual (1)	1	
Product Quality Certificate (1)	1	(only-KAY1(E))

Accessories are attached in the sub unit, RXE (only-KAY1(E))

Product Quality Certificate (1)	1	(only-KAY1(E))

Все каталоги и инструкции здесь: https://splitsystema48.ru/instrukcii-po-ekspluatacii-kondicionerov.html

Si33-102.book Page 133 Tuesday, June 26, 2001 3:18 PM

Notes:
- Attached pipes are only for front piping. (RSXY24-30)
- For side or bottom piping , see “Optional accessories”

Все каталоги и инструкции здесь: https://splitsystema48.ru/instrukcii-po-ekspluatacii-kondicionerov.html

Si33-102.book Page 134 Tuesday, June 26, 2001 3:18 PM

1.6 Optional Accessories

The outdoor unit requires purchasing the following refrigerant branch kits separately.

Refnet Header	KHRJ26K11H	KHRJ26K17H	KHRJ26K18H
	KHRJ26K37H	KHRJ26K40H	
Refnet Joint	KHRJ26K11T	KHRJ26K17T	KHRJ26K18T
	KHRJ26K37T	KHRJ26K40T	KHRJ26K75T
Pipe Size Reducer	KHRJ26K40TP	KHRJ26K40HP	KHRJ26K75TP
Piping Kit for Side-Piping	KHF30A30L		
Piping Kit for Bottom-Piping	KHF30A30U		

Note:

- Refer to chapter “Example of connection” on page 169 for selection of the refrigerant branch kits you need.
- Piping kit for side and bottom piping are for RSXY24,26,28 and 30.

Все каталоги и инструкции здесь: https://splitsystema48.ru/instrukcii-po-ekspluatacii-kondicionerov.html

Si33-102.book Page 135 Tuesday, June 26, 2001 3:18 PM

1.7 Technical Specifications

"KAY1" for 3N~380-415V 50Hz "KAYAL" for 3N~380V 60Hz

General			RSXY16	RSXY18	RSXY20	RSXY24	RSXY26	RSXY28	RSXY30
Nominal Cooling Capacity		kW	44.8	50.4	56.0	67.2	72.8	78.4	84.0
Nominal Heating Capacity		kW	50.0	56.5	63.0	75.0	81.5	88.0	94.5
Nominal Input Cooling/Heating		kW	16.9 / 15.6	19.2 / 17.6	21.3 / 19.6	26.3 / 22.7	28.7 / 24.7	30.7 / 26.7	32.8 / 28.7
Dimensions HxWxD	Main Unit	mm	1440×1280 ×690	1440×1280 ×690	1440×1280 ×690	1450×2580 ×690	1450×2580 ×690	1450×2580 ×690	1450×2580 ×690
	Sub Unit	mm	1220×1280 ×690	1220×1280 ×690	1440×1280 ×690	1220×1280 ×690	1440×1280 ×690	1220×1280 ×690	1440×1280 ×690
Weight	Main Unit	kg	365	370	370	625	625	635	635
	Sub Unit	kg	95	95	105	95	105	95	105
Connections	Refrigerant Gas Inlet	inch	1 3/8 OD	1 3/8 OD	1 3/8 OD	1 5/8 OD	1 5/8 OD	1 5/8 OD	1 5/8 OD
		mm	34.9	34.9	34.9	41.3	41.3	41.3	41.3
	Refrigerant Liquid Inlet	inch	5/8 flare	6/8 flare	6/8 flare	6/8 flare	7/8 OD	7/8 OD	7/8 OD
		mm	15.9	19.1	19.1	19.1	22.2	22.2	22.2
	Refrigerant Gas Inlet for Sub Units	inch	1 OD	1 OD	1 OD	1 OD	1 OD	1 OD	1 OD
		mm	25.4	25.4	25.4	25.4	25.4	25.4	25.4
	Refrigerant Liquid Inlet for Sub Units	inch	1/2 flare	1/2 flare	1/2 flare	1/2 flare	1/2 flare	1/2 flare	1/2 flare
		mm	12.7	12.7	12.7	12.7	12.7	12.7	12.7

(1) Refer to the engineering data book for the complete list of specifications.

(2) The nominal cooling capacity is based on:
- indoor temperature: 27˚CDB/19˚CWB
- outdoor temperature: 35˚CDB
- pipe length: 5m
- level difference: 0m

(3)The nominal heating capacity is based on:
- indoor temperature: 20°CDB
- outdoor temperature: 7°CDB/6°CWB
- pipe length: 5m
- level difference: 0m

(4) The nominal input includes total input of the unit: compressor, fan motor and control circuit.

Compressor		RSXY16KAY1	RSXY18KAY1	RSXY20KAY1	RSXY24KAY1	RSXY26KAY1	RSXY28KAY1	RSXY30KAY1
Model		JT236D-VTYE + JT212D-TYE	JT236D-VTYE + JT265D-TYE	JT236D-VTYE + JT265D-TYE	JT236D-VTYE + JT236D-TYE + JT236D-TYE	JT236D-VTYE + JT236D-TYE + JT236D-TYE	JT236D-VTYE + JT300D-TYE + JT300D-TYE	JT236D-VTYE + JT300D-TYE + JT300D-TYE
Oil Type		SUNISO 4GSDID-K	SUNISO 4GSDID-K	SUNISO 4GSDID-K	SUNISO 4GSDID-K	SUNISO 4GSDID-K	SUNISO 4GSDID-K	SUNISO 4GSDID-K
Oil Charge Volume	l	4.0 + 4.0	4.0 + 4.0	4.0 + 4.0	4.0 + 4.0 + 4.0	4.0 + 4.0 + 4.0	4.0 + 4.0 + 4.0	4.0 + 4.0 + 4.0
Crankcase Heater	W	50 + 50	50 + 50	50 + 50	50 + 50 + 50	50 + 50 + 50	50 + 50 + 50	50 + 50 + 50
Refrigerant Type		R-22	R-22	R-22	R-22	R-22	R-22	R-22
Refrigerant Charge	kg	18.6	19.7	19.7	27.0	27.0	29.2	29.2
Condenser		**RSXY16KAY1**	**RSXY18KAY1**	**RSXY20KAY1**	**RSXY24KAY1**	**RSXY26KAY1**	**RSXY28KAY1**	**RSXY30KAY1**
Nominal Air Flow	m^3/min	320	320	340	490	510	490	510
Fan Motor Output	W	140 × 2,230 × 2	140 × 2,230 × 2	140 × 2,230 × 2	140 × 3,230 × 3	140 × 3,230 × 3	140 × 3,230 × 3	140 × 3,230 × 3

Compressor		RSXY16KAYAL	RSXY18KAYAL	RSXY20KAYAL	RSXY24KAYAL	RSXY26KAYAL	RSXY28KAYAL	RSXY30KAYAL
Model		JT236D-VTYE + JT212D-TYH	JT236D-VTYE + JT265D-TYH	JT236D-VTYE + JT265D-TYH	JT236D-VTYE + JT236D-TYH + JT236D-TYH	JT236D-VTYE + JT236D-TYH + JT236D-TYH	JT236D-VTYE + JT300D-TYH + JT300D-TYH	JT236D-VTYE + JT300D-TYH + JT300D-TYH
Oil Type		SUNISO 4GSDID-K	SUNISO 4GSDID-K	SUNISO 4GSDID-K	SUNISO 4GSDID-K	SUNISO 4GSDID-K	SUNISO 4GSDID-K	SUNISO 4GSDID-K
Oil Charge Volume	l	4.0 + 4.0	4.0 + 4.0	4.0 + 4.0	4.0 + 4.0 + 4.0	4.0 + 4.0 + 4.0	4.0 + 4.0 + 4.0	4.0 + 4.0 + 4.0
Crankcase Heater	W	50 + 50	50 + 50	50 + 50	50 + 50 + 50	50 + 50 + 50	50 + 50 + 50	50 + 50 + 50
Refrigerant Type		R-22	R-22	R-22	R-22	R-22	R-22	R-22
Refrigerant Charge	kg	18.6	19.7	19.7	27.0	27.0	29.2	29.2
Condenser		**RSXY16KAYAL**	**RSXY18KAYAL**	**RSXY20KAYAL**	**RSXY24KAYAL**	**RSXY26KAYAL**	**RSXY28KAYAL**	**RSXY30KAYAL**
Nominal Air Flow	m^3/min	320	320	340	490	510	490	510
Fan Motor Output	W	140 × 2,230 × 2	140 × 2,230 × 2	140 × 2,230 × 2	140 × 3,230 × 3	140 × 3,230 × 3	140 × 3,230 × 3	140 × 3,230 × 3

Все каталоги и инструкции здесь: https://splitsystema48.ru/instrukcii-po-ekspluatacii-kondicionerov.html

Si33-102.book Page 136 Tuesday, June 26, 2001 3:18 PM

1.8 Electrical Specifications

Model			RSXY16 KAY1	RSXY18 KAY1	RSXY20 KAY1	RSXY24 KAY1	RSXY26 KAY1	RSXY28 KAY1	RSXY30 KAY1
Power Supply	- Phase		3N~	3N~	3N~	3N~	3N~	3N~	3N~
	- Frequency	Hz	50	50	50	50	50	50	50
	- Voltage	V	380 – 415	380 – 415	380 – 415	380 – 415	380 – 415	380 – 415	380 – 415
	- Voltage Tolerance	%	+ 6 / – 10	+ 6 / – 10	+ 6 / – 10	+ 6 / – 10	+ 6 / – 10	+ 6 / – 10	+ 6 / – 10
	- Recommended Fuses	A	45	50	60	60	70	70	70
Compressor	- Phase		3~	3~	3~	3~	3~	3~	3~
	- Frequency	Hz	50	50	50	50	50	50	50
	- Voltage	V	380 – 415	380 – 415	380 – 415	380 – 415	380 – 415	380 – 415	380 – 415
Control and Fan Motor	- Phase		1~	1~	1~	1~	1~	1~	1~
	- Frequency	Hz	50	50	50	50	50	50	50
	- Voltage	V	220 – 240	220 – 240	220 – 240	220 – 240	220 – 240	220 – 240	220 – 240
	- Nominal Running Current	A	4.5	4.5	4.5	6.7	6.7	6.7	6.7

Model			RSXY16 KAYAL	RSXY18 KAYAL	RSXY20 KAYAL	RSXY24 KAYAL	RSXY26 KAYAL	RSXY28 KAYAL	RSXY30 KAYAL
Power Supply	- Phase		3N~	3N~	3N~	3N~	3N~	3N~	3N~
	- Frequency	Hz	60	60	60	60	60	60	60
	+0	V	380	380	380	380	380	380	380
	- Voltage Tolerance	%	+ 6 / – 10	+ 6 / – 10	+ 6 / – 10	+ 6 / – 10	+ 6 / – 10	+ 6 / – 10	+ 6 / – 10
	- Recommended Fuses	A	45	50	60	60	70	70	80
Compressor	- Phase		3~	3~	3~	3~	3~	3~	3~
	- Frequency	Hz	60	60	60	60	60	60	60
	- Voltage	V	380	380	380	380	380	380	380
Control and Fan Motor	- Phase		1~	1~	1~	1~	1~	1~	1~
	- Frequency	Hz	60	60	60	60	60	60	60
	- Voltage	V	220	220	220	220	220	220	220
	- Nominal Running Current	A	6.0	6.0	6.0	9.0	9.0	9.0	9.0

Все каталоги и инструкции здесь: https://splitsystema48.ru/instrukcii-po-ekspluatacii-kondicionerov.html

Si33-102.book Page 137 Tuesday, June 26, 2001 3:18 PM

2. Main Components

2.1 Main Components

For main components and function of the main components, refer to the Engineering Data Book and service manual Si33-101.

Все каталоги и инструкции здесь: https://splitsystema48.ru/instrukcii-po-ekspluatacii-kondicionerov.html

Si33-102.book Page 138 Tuesday, June 26, 2001 3:18 PM

3. Selection of Location

3.1 Selection of Location

This unit, both indoor and outdoor, is suitable for installation in a commercial and light industrial environment. If installed as a household appliance it could cause electromagnetic interference.

The VRV plus outdoor units should be installed in a location that meets the following requirements:

1. The foundation is strong enough to support the weight of the unit and the floor is flat to prevent vibration and noise generation.
2. The space around the unit is adequate for servicing and the minimum space for air inlet and air outlet is available. (Refer to below figure and choose one of both possibilities.)

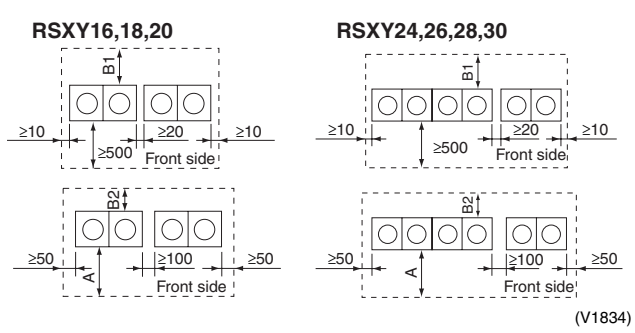

3. There is no danger of fire due to leakage of inflammable gas.
4. Ensure that water cannot cause any damage to the location in case it drips out the unit (e.g. in case of a blocked drain pipe).
5. The piping length between the outdoor unit and the indoor unit may not exceed the allowable piping length. (See “Allowable pipe length” on page 97.)
6. Select the location of the unit in such a way that neither the discharged air nor the sound generated by the unit disturb anyone.
7. Make sure that the air inlet and outlet of the unit are not positioned towards the main wind direction. Frontal wind will disturb the operation of the unit. If necessary, use a windscreen to block the wind.

Caution

1. An inverter air conditioner may cause electronic noise generated from AM broadcasting. Examine where to install the main air conditioner and electric wires, keeping proper distances away from stereo equipment, personal computers, etc.

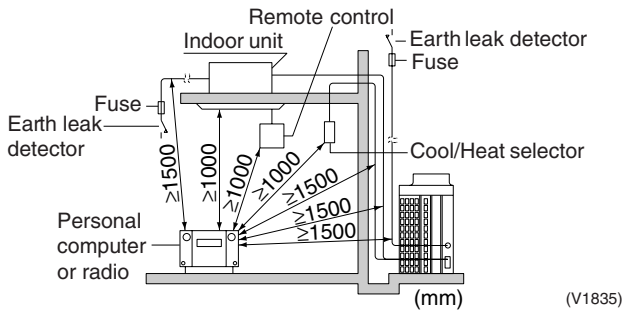

If the electric wave of AM broadcasting is particularly weak, keep distances of 3m or more and use conduit tubes for power and transmission lines.

2. In heavy snowfall areas, select an installation site where snow will not affect operation of the unit.
3. The refrigerant R-22 itself is nontoxic, nonflammable and is safe. If the refrigerant should leak however, its concentration may exceed the allowable limit depending on room size. Due to this it could be necessary to take measures against leakage. Refer to the chapter “Caution for refrigerant leaks”.

Все каталоги и инструкции здесь: https://splitsystema48.ru/instrukcii-po-ekspluatacii-kondicionerov.html

Si33-102.book Page 139 Tuesday, June 26, 2001 3:18 PM

4. Inspecting and Handling the Unit

4.1 Inspecting and Handling the Unit

The units are packed in a wooden crate and attached on a wooden pallet.

At delivery, the package should be checked and any damage should be reported immediately to the carrier claims agent.

When handling the unit, take into account the following:

1. Fragile, handle the unit with care.
   Keep the unit upright in order to avoid compressor damage.
2. Lift the unit preferably with a crane and 2 belts of at least 8m or 10m (RXY16,20) long.
3. When lifting the unit with a crane, always use protectors to prevent belt damage and pay attention to the position of the unit's centre of gravity.

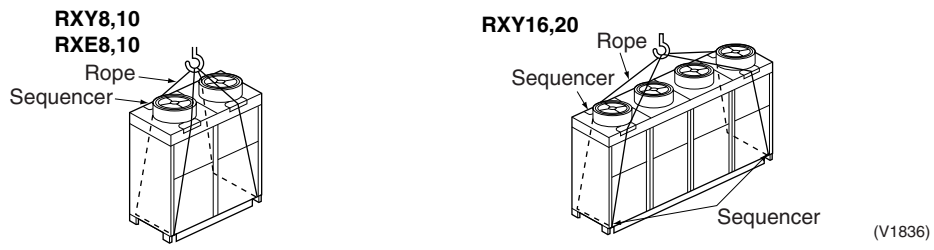

4. Bring the unit as close to its final installation position in its original package to prevent damage during transport.

Все каталоги и инструкции здесь: https://splitsystema48.ru/instrukcii-po-ekspluatacii-kondicionerov.html

Si33-102.book Page 140 Tuesday, June 26, 2001 3:18 PM

5. Unpacking and Placing the Unit

5.1 Unpacking and Placing the Unit

1. Remove the wooden crate from the unit.
2. Remove the four screws fixing the unit to the pallet.
3. The unit must be installed on a solid longitudinal foundation (steelbeam frame or concrete) as indicated in below figure.

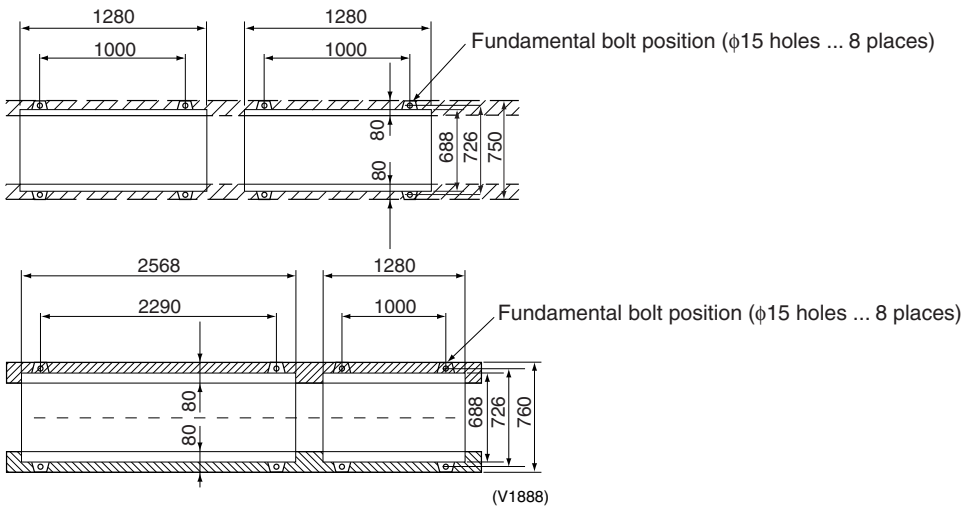

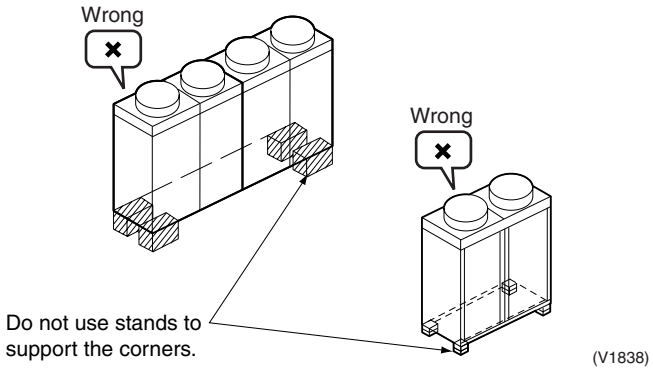

Note: Maximum height of the foundation is 150mm.

4. Lift the unit from the pallet and place it on its installation position.
5. Fasten the unit in place using four anchor bolts M12.
6. Remove the upper and lower service plate.
7. When closing the service panels take care that the tightening torque does not exceed 4.1 Nm.
8. Remove the yellow shipping stays from the compressor support as shown in the figure (2 stays per single compressor). Tighten the installation bolts firmly again afterwards.

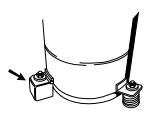

(V0898)

Caution

1. Prepare a water drainage channel around the foundation to drain waste water from around the unit.
2. If the unit is to be installed on a roof, check the strength of the roof and its drainage facilities first.
3. If the unit is to be installed on a frame, install the waterproofing board within a distance of 150mm under the unit in order to prevent infiltration of water coming from under the unit.

Refer “Installation of Outdoor Unit” page 55 for more foundation detail.

Все каталоги и инструкции здесь: https://splitsystema48.ru/instrukcii-po-ekspluatacii-kondicionerov.html

Si33-102.book Page 141 Tuesday, June 26, 2001 3:18 PM

6. Refrigerant Piping

6.1 Refrigerant Piping

Caution All field piping must be installed by a licensed refrigeration technician and must comply with relevant local and national regulations.

Все каталоги и инструкции здесь: https://splitsystema48.ru/instrukcii-po-ekspluatacii-kondicionerov.html

Si33-102.book Page 142 Tuesday, June 26, 2001 3:18 PM

6.2 Selection of Piping Material

Step 1

Use the following material specification for refrigerant piping:

- construction material: Phosphoric acid deoxidized seamless copper for refrigerant.
- size: Determine the proper size referring to chapter “Example of connection”.

Step 2

Make sure to use the particular branches of piping that have been selected referring to chapter “Example of connection” on page 169.

Все каталоги и инструкции здесь: https://splitsystema48.ru/instrukcii-po-ekspluatacii-kondicionerov.html

Si33-102.book Page 143 Tuesday, June 26, 2001 3:18 PM

6.3 Connecting the Refrigerant Piping

1. Piping Installation

Installation of refrigerant piping is possible as front connection, side connection and bottom connection.

Caution

Be sure to use the attached pipe when carrying out piping work in the field.
Separately use the optional “KHF30A30L” or “KHF30A30U” piping kit when carrying out connections for the side and bottom on RSXY24, 26, 28, and 30.
Connect the flange on the valve on the gas side before connecting the flare nut on the valve on the liquid side.
(Connecting the liquid side first will make it harder to connect the gas side.)
Be sure that the local piping does not touch other pipes, the bottom panel or side panel. Especially for the bottom and side connection, be sure to protect the gas piping with the provided insulation, to prevent it from coming into contact with the casing.

RSXY16,18,20

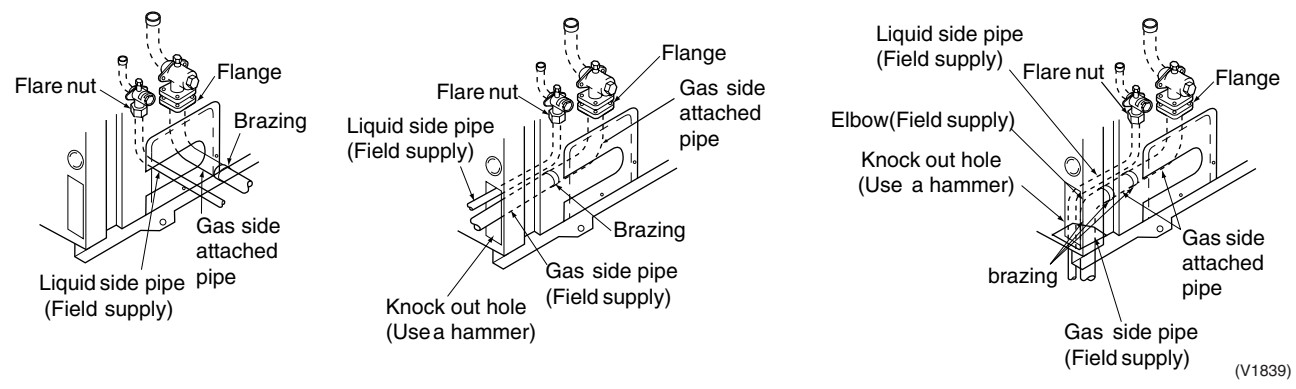

RSXY24,26,28,30

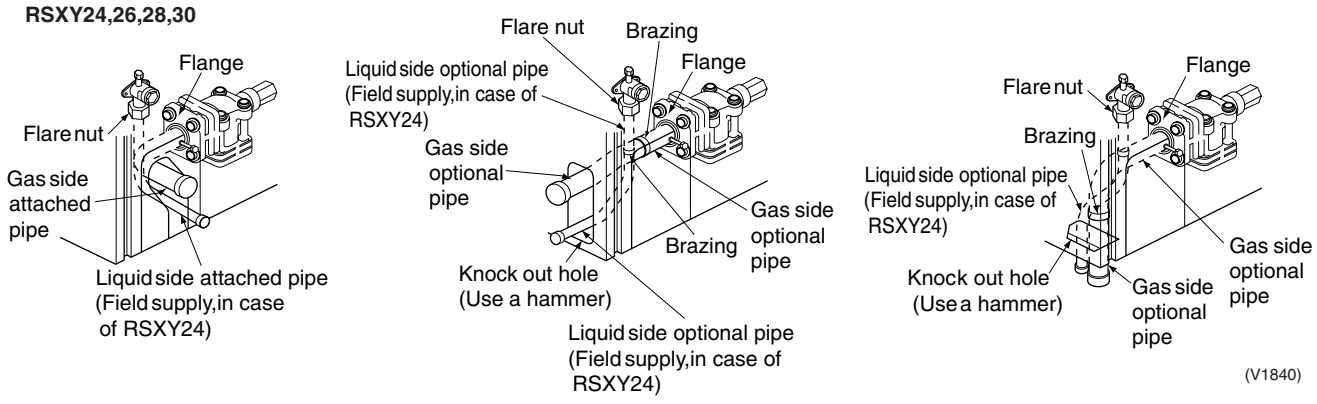

Notes:

1. Front Connection
   - Make sure to close the piping intake hole again after installation work.
   - Stop valve cover

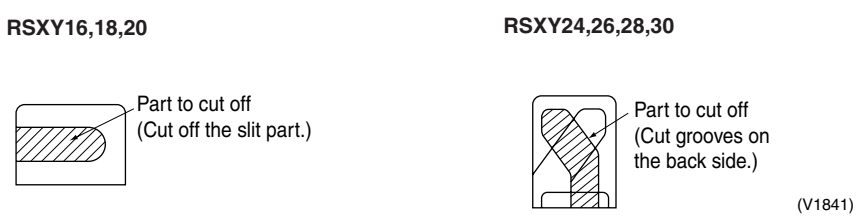

2. Side Connection
   - Use a hammer and knock out the hole.
   - Piping kit “KHF30A30L” is required for RSXY24,26,28 and 30.

Refer the optional “KHF30A30L” or “KHF30A30U” piping kit on page 107 for more detail.

Все каталоги и инструкции здесь: https://splitsystema48.ru/instrukcii-po-ekspluatacii-kondicionerov.html

Si33-102.book Page 144 Tuesday, June 26, 2001 3:18 PM

3. Bottom Connection
   - Piping kit “KHF30A30U” is required for RSXY24,26,28 and 30.
   - For RSXY16,18 and 24, bend the liquid side pipe as below and connect it to the stop valve.

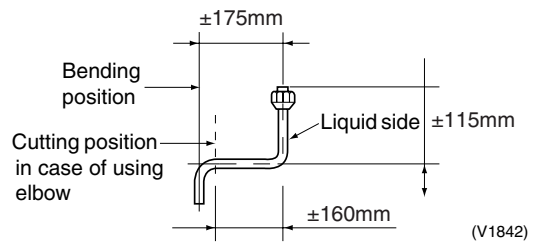

RSXY16,18,20

Bend the gas side pipe as below.

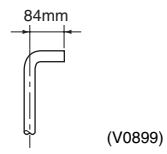

Connect with attached pipes.

1. Cut the attached pipe

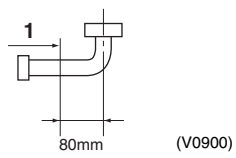

1. Cutting position

2. Connect attached pipes and field pipe

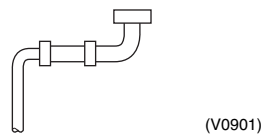

RSXY24,26,28,30

The diagram at right shows the opening on the underside for connecting the bottom. Note that piping connected with elbow-pipes (procured locally) cannot pass through the opening.

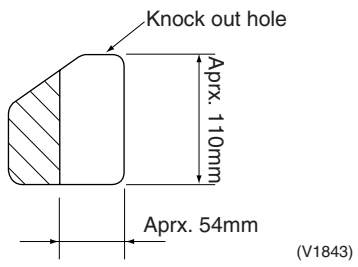

Все каталоги и инструкции здесь: https://splitsystema48.ru/instrukcii-po-ekspluatacii-kondicionerov.html

Si33-102.book Page 145 Tuesday, June 26, 2001 3:18 PM

2. Piping between Main Unit (RXY-) and Sub Unit (RXE-)

- Be sure to open the cornered knock out hole on the left panel of the sub unit when connecting the branch piping between outdoor units.

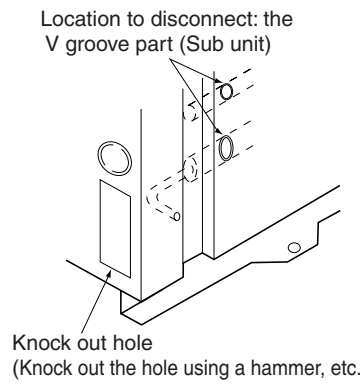

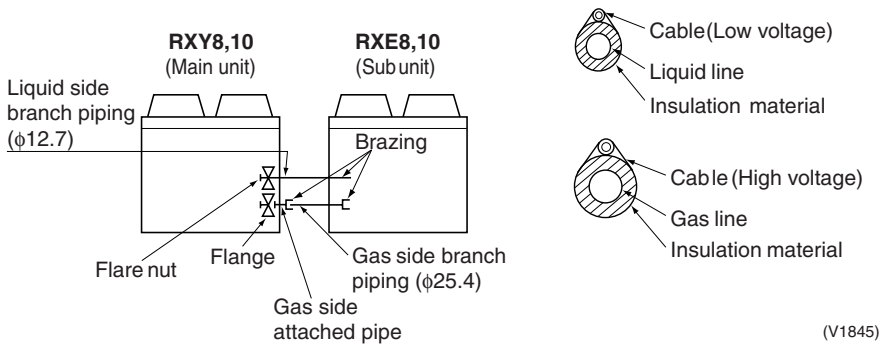

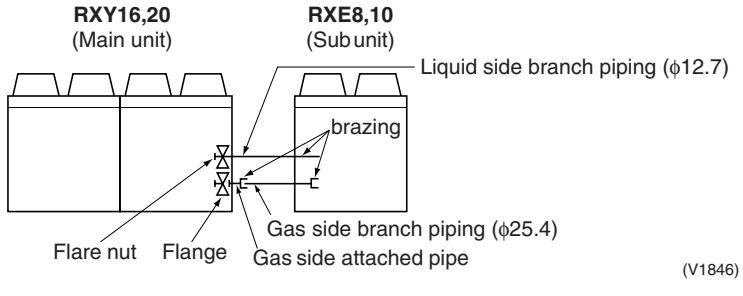

Note:

- After brazing, pass the connection cable through the through-slots. Pass the connection cable through the through-slots only with flange disconnected. (If the flange is still connected, the connector of the connection cable will not pass through.)

3. Piping Limitation

Make sure to perform the piping installation within the range of the maximum allowable pipe length, allowable level difference and allowable length after branching as indicated in chapter “Example of connection”.

4. REFNET Joint

For installation of the refrigerant branching kit, refer to the installation manual delivered with the kit.
Mount the REFNET joint so that it branches either horizontally or vertically.

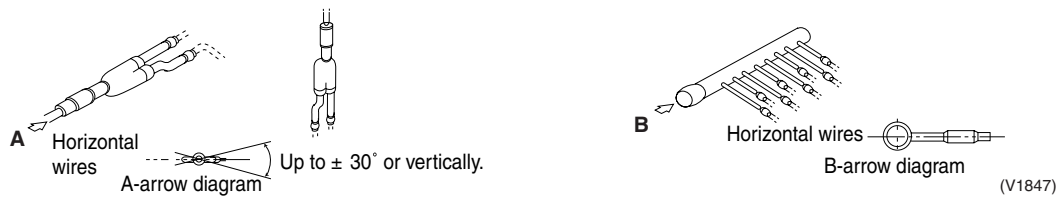

Mount the REFNET header so that it branches horizontally.

Все каталоги и инструкции здесь: https://splitsystema48.ru/instrukcii-po-ekspluatacii-kondicionerov.html

Si33-102.book Page 146 Tuesday, June 26, 2001 3:18 PM

5. Pipe Connection

- Apply the refrigerant oil around the flare portions before connecting.
- Only proceed with brazing after carrying out “Refrigerant pipe flushing” (note) or while releasing nitrogen into the refrigerant piping (note).
  If brazing is done without “Refrigerant pipe flushing” or without nitrogen being released into the piping, a thick oxidized film will form on the inside of the piping, affecting the valves and compressors in the refrigerant system, and making normal operation difficult.

Note: **Refrigerant Pipe Flushing**

Flushing removes foreign particles from the inside of pipes by means of nitroren gas pressure.

<Three main effects>

1. Removes oxidized film inside copper pipes generated by insufficient charging of nitrogen gas during brazing.
2. Removes foreign particles and moisture that entered pipes due to inadequate preparation.
3. Confirms connection of pipes between indoor and outdoor units (for both liquid and gas pipes).

<Procedure>

1. Mount a pressure reducing valve on the nitrogen cylinder.
   * Be sure to use a nitrogen gas. (Use of oxygen gas prohibited.)
2. Connect the charge hose of the pressure reducing valve to the service port of the liquid pipe of outdoor unit.
3. Mount a blind plug on indoor unit (B). Do not mount a blind plug on unit A.
4. Open the main valve of the nitrogen cylinder, and adjust the pressure reducing valve until the pressure becomes 0.5 MPa.
5. Make sure that the nitrogen gas is released through the liquid pipe of unit A.
6. Flushing

- Close the pipe end with the palm of the hand.
- When the pressure becomes high, move the hand quickly.
  (1st flushing)
- Close the pipe end with the palm of the hand again.
  (Conduct the 2nd flushing.)

* During the flushing process, place a clean cloth at the pipe end, and check the content and amount of the removed foreign particles. If even a small amount of moisture is found, be sure to remove all moisture from inside the pipe.
Procedure
(1) Conduct flushing using a nitrogen gas (until no moisture comes out).
(2) Conduct vacuum drying.

7. Close the main valve of the nitrogen cylinder.
8. Repeat the same procedure for unit B.
9. After completing the flushing for the liquid pipes, conduct flushing for the gas pipes.

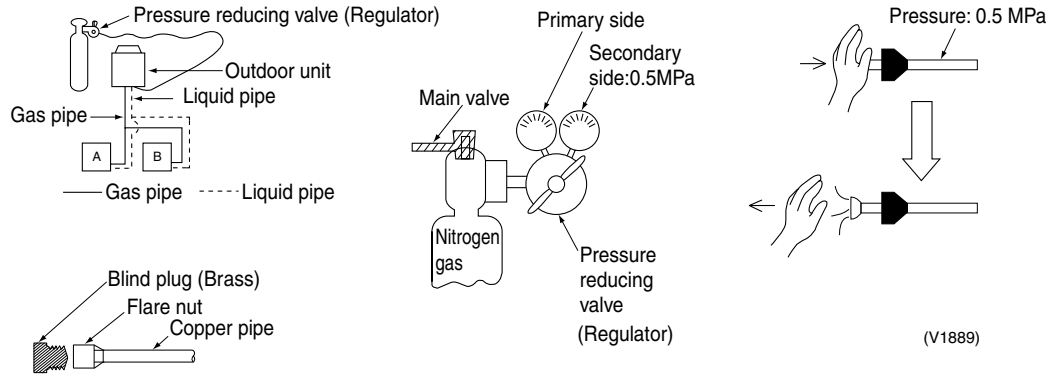

Все каталоги и инструкции здесь: https://splitsystema48.ru/instrukcii-po-ekspluatacii-kondicionerov.html

Si33-102.book Page 147 Tuesday, June 26, 2001 3:18 PM

- The pressure regulator for the nitrogen released when doing the brazing should be set to 0.02 MPa (0.2 kg/cm²) or less.

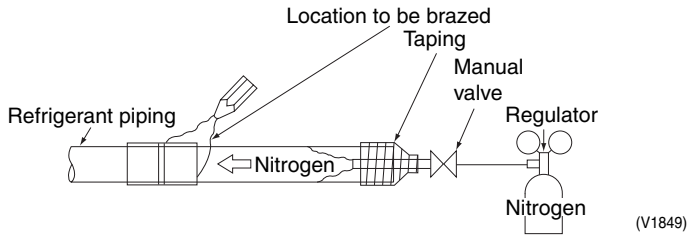

6. Protection against Contamination when Installing Pipes

- Take measures to prevent foreign materials like moisture and contamination from mixing into the system.

Place	Installation Period	Protection Method
Outdoor	More than a month	Pinch the pipe
	Less than a month	Pinch or tape the pipe
Indoor	Regardless of the period	

- Great caution is needed when passing copper tubes through walls.

Все каталоги и инструкции здесь: https://splitsystema48.ru/instrukcii-po-ekspluatacii-kondicionerov.html

Si33-102.book Page 148 Tuesday, June 26, 2001 3:18 PM

6.4 Leak Test and Vacuum Drying

The units were checked for leaks by the manufacturer.

Confirm that the valves are firmly closed before pressure test or vacuuming.

Air Tight Test and Vacuum Drying

- Air tight test: Make sure to use nitrogen gas.
  Pressurize the liquid and gas pipes to 2.8MPa (do not pressurize more than 2.8MPa). If the pressure does not drop within 24 hours, the system passes the test. If the pressure drops, check where the nitrogen leaks from.
- Vacuum drying: Carry out evacuation of all liquid pipes, gas pipes, and gas-side branch pipes using the vacuum pump.

RSXY16,18,20 < When conducting an airtightness test >

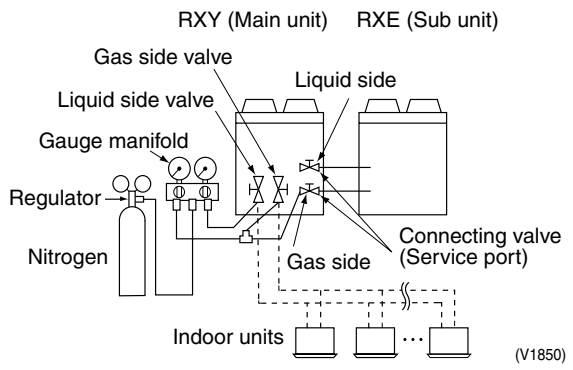

< When vacuum drying >

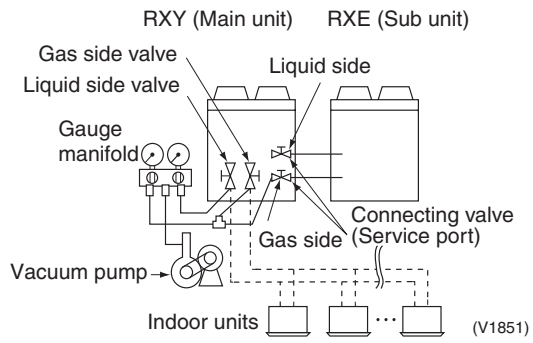

RSXY24,26,28,30 < When conducting an airtightness test >

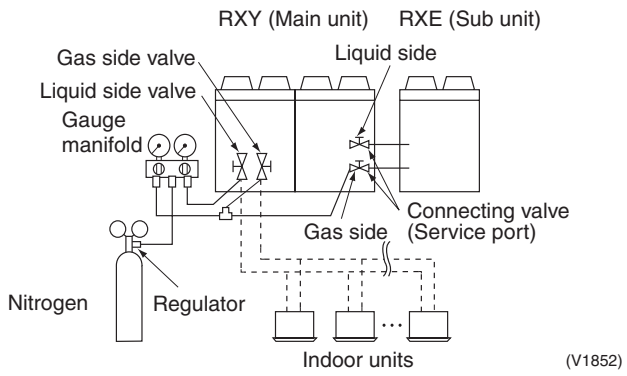

< When vacuum drying >

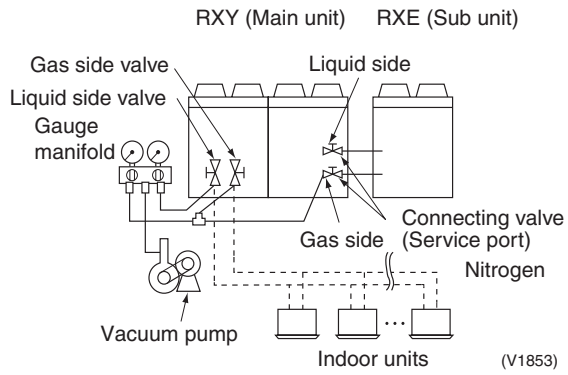

Все каталоги и инструкции здесь: https://splitsystema48.ru/instrukcii-po-ekspluatacii-kondicionerov.html

Si33-102.book Page 149 Tuesday, June 26, 2001 3:18 PM

6.5 Pipe Insulation

After finishing the leak test and vacuum drying, the piping must be insulated. Take into account the following points:

- Make sure to insulate the connection piping and refrigerant branch kits entirely.
- Make sure to insulate the gas side connection piping and refrigerant branch kits entirely against heat, and depending on operation conditions (e.g. when performing cooling operation with an outside air temperature of ≤15°C), consider to also make a heat insulation of the liquid side connection piping and refrigerant branch kits to prevent dewing.
- Use heat resistant polyethylene foam which can withstand a temperature of 70°C for liquid side piping and polyethylene foam which can withstand a temperature of 120°C for gas side piping.

Caution Be sure to insulate local pipes, as touching them can cause burns.

Все каталоги и инструкции здесь: https://splitsystema48.ru/instrukcii-po-ekspluatacii-kondicionerov.html

Si33-102.book Page 150 Tuesday, June 26, 2001 3:18 PM

6.6 Additional Refrigerant Charge

Caution Refrigerant may only be charged after performing the leak test and the vacuum drying. (See page 148)
When charging a system, care shall be taken that its maximum permissible charge is never exceeded, in view of the danger of liquid hammer.
Charging with an unsuitable substance may cause explosions and accidents, so always ensure that the appropriate refrigerant (R-22) is charged.
Refrigerant containers shall be opened slowly.
Always use protective gloves and protect your eyes when charging refrigerant.
To avoid compressor breakdown, do not change the refrigerant more than the specified amount to raise the condensing pressure.

- This outdoor unit is factory charged with refrigerant and depending on pipe sizes and pipe lengths some systems require additional charging of refrigerant.
- Determine the weight of refrigerant to be charged additionally referring to the item “Additional refrigerant to be charged” in chapter “Example of connection”. And fill in the amount in the “Request for the indication of additional refrigerant charging amount and installation date” attached to the unit.
- After the vacuum drying is finished, charge the additional refrigerant in through the liquid stop valve service port. Taking into account following instructions:
  1. Check that gas and liquid stop valves are closed.
  2. Stop the compressor and charge the specified weight of refrigerant.

RSXY16,18,20

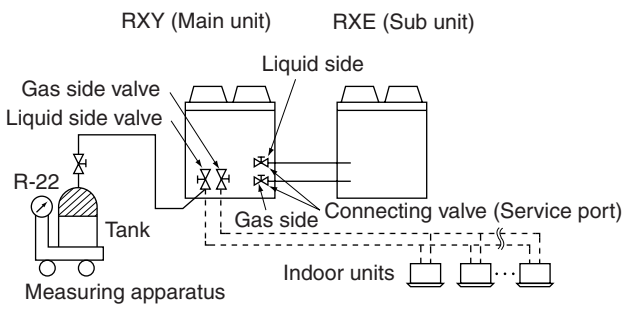

RSXY24,26,28,30

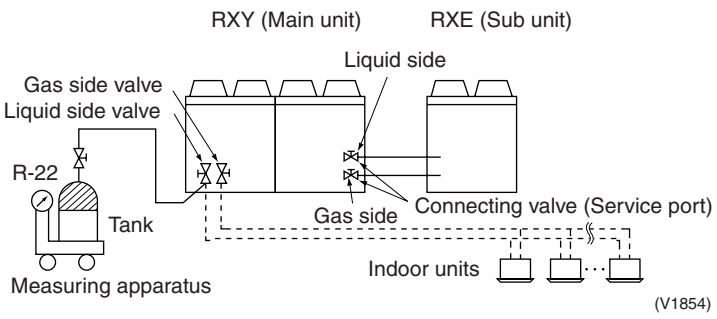

Все каталоги и инструкции здесь: https://splitsystema48.ru/instrukcii-po-ekspluatacii-kondicionerov.html

Si33-102.book Page 151 Tuesday, June 26, 2001 3:18 PM

7. Field Wiring

7.1 Field Wiring

Caution All field wiring and components must be installed and maintenanced by a licensed electrician and must comply with relevant local and national regulations.
The field wiring must be carried out in accordance with the wiring diagrams and the instructions given below.
Be sure to use a dedicated power circuit. Never use a power supply shared by another appliance.

Все каталоги и инструкции здесь: https://splitsystema48.ru/instrukcii-po-ekspluatacii-kondicionerov.html

Si33-102.book Page 152 Tuesday, June 26, 2001 3:18 PM

7.2 Internal Wiring – Parts Table

Refer to the wiring diagram sticker on the unit. The abbreviations used are listed below:

RSXY16, 18, 20

A1P	Printed circuit board (MAIN)
A2P	Printed circuit board (INV)
A3P	Printed circuit board (SUB)
A5P	Printed circuit board
BS1-5	Push button switch (MODE, SET, RETURN, WIRING CHECK, RESET)
C1R-4R	Capacitor
C5R,6R	Capacitor
CN-1,CN-19	Relaying connector
F2C	Over current relay (M2C)
F1S	Surge Absorber
F1U,2U	Fuse (250V,10A) (A1P)
F1U	Fuse (250V,10A) (A3P)
H1P-7P	Pilotlamp (service monitor - orange) (A1P) H2P ; Prepare-flickering Malfunction detection-light up
H1P-4P	Pilotlamp (service monitor - red) (A2P)
HAP	Pilotlamp (service monitor - green) (A1P-3P)
INV	Inverter
J1HC,2HC	Crankcase heater
K1M,2M	Magnetic contactor (M1C,2C)
K1R	Magnetic relay (M1F) (A1P)
K1R	Magnetic relay (A2P)
K2R	Magnetic relay (M1F) (A1P)
K2R	Magnetic relay (A2P)
K3R	Magnetic relay (M2F) (A1P)
K4R	Magnetic relay (K2M) (A1P)
K5R	Magnetic relay (A3P)
K6R	Magnetic relay (J1HC) (A1P)
K6R	Magnetic relay (M3F) (A3P)
K7R	Magnetic relay (Y1R) (A1P)
K7R	Magnetic relay (M4F) (A3P)
K8R	Magnetic relay (Y1S) (A1P)
K9R	Magnetic relay (Y2S) (A1P)
K10R	Magnetic relay (Y3S) (A1P)
K11R	Magnetic relay (Y4S) (A1P)
K12R	Magnetic relay (Y5S) (A1P)

L1R	Reactor
M1C,2C	Motor (compressor)
MF1,2F	Motor (fan)
MF3,4F	Motor (fan)
Q1M,2M	Thermo switch (M1F, M2F)
Q3M,4M	Thermo switch (M3F, M4F)
R1	Resistor
R66-69	Resistor
R93,94	Resistor
R1T	Thermistor (AIR) (A1P)
R1T	Thermistor (FIN) (A2P)
R2-1T,2T	Thermistor (coil)
R3-1T,2T	Thermistor (discharge)
R4-1T,2T	Thermistor (header)
R6-1T	Thermistor (suction)
SENPH	Pressure sensor (high)
SENPL	Pressure sensor (low)
S1PH,2PH	Pressure switch (high)
TB1,2	Terminal circuit board (relay)
T1R,2R	Transformer (220-240V/22V)
X1M	Terminal strip (power)
X2M	Terminal strip (control)
Y1E,2E	Electronic expansion valve
Y1R	4 way valve
Y1S	Solenoid valve (auxiliary condenser)
Y2S	Solenoid valve (hotgas)
Y3S	Solenoid valve (injection M1C)
Y4S	Solenoid valve (injection M2C)
Y5S	Solenoid valve (receiver)
Z1F-5F	Noise filter
(D M)	Diode module
(P C)	Power circuit
(P M)	Power module
(PRC)	Phase reversal detect circuit
(S D)	Safety devices input

Refer “Wiring diagrams” for outdoor unit on page 116, 117.

Все каталоги и инструкции здесь: https://splitsystema48.ru/instrukcii-po-ekspluatacii-kondicionerov.html

Si33-102.book Page 153 Tuesday, June 26, 2001 3:18 PM

RSXY24, 26, 28, 30

A1P	Printed circuit board (MAIN)
A2P	Printed circuit board (INV)
A3P,4P	Printed circuit board (SUB)
A5P	Printed circuit board
BS1-5	Push button switch (MODE, SET, RETURN, WIRING CHECK, RESET)
C11R,12R	Capacitor
C21R,22R	Capacitor
C3R,4R	Capacitor
C5R,6R	Capacitor
CN-1,CN-19	Relaying connector
F1S	Surge Absorber
F2C,3C	Over current relay (M2C,3C)
F1U,2U	Fuse (250V,10A) (A1P)
F1U	Fuse (250V,10A) (A3P,4P)
H1P-7P	Pilotlamp (service monitor - orange) (A1P) H2P ; Prepare-flickering Malfunction detection-light up
H1P-4P	Pilotlamp (service monitor - red) (A2P)
HAP	Pilotlamp (service monitor - green) (A1P-4P)
INV	Inverter
J1HC-3C	Crankcase heater
K1M,3M	Magnetic contactor (M1C,2C,3C)
K1R	Magnetic relay (M11F) (A1P)
K1R	Magnetic relay (A2P)
K1R	Magnetic relay (Y6S) (A3P)
K2R	Magnetic relay (M11F) (A1P)
K2R	Magnetic relay (A2P)
K3R	Magnetic relay (M12F) (A1P)
K4R	Magnetic relay (K2M) (A1P)
K5R	Magnetic relay (K3M) (A1P)
K5R	Magnetic relay (A3P,A4P)
K6R	Magnetic relay (J1HC) (A1P)
K6R	Magnetic relay (M21F) (A3P)
K6R	Magnetic relay (M3F) (A4P)
K7R	Magnetic relay (Y1R) (A1P)
K7R	Magnetic relay (M22F) (A3P)
K7R	Magnetic relay (M4F) (A4P)
K8R	Magnetic relay (Y1S) (A1P)
K9R	Magnetic relay (Y2S) (A1P)
K10R	Magnetic relay (Y3S) (A1P)
K11R	Magnetic relay (Y4S) (A1P)
K12R	Magnetic relay (Y5S) (A1P)
L1R	Reactor
M1C,2C,3C	Motor (compressor)
MF11,12F	Motor (fan)
MF21,22F	Motor (fan)
MF3,4F	Motor (fan)

Q11M,12M	Thermo switch (M11F, M12F)
Q21M,22M	Thermo switch (M21F, M22F)
Q3M,4M	Thermo switch (M3F, M4F)
R1	Resistor
R66-69	Resistor
R93,94	Resistor
R1T	Thermistor (AIR) (A1P)
R1T	Thermistor (FIN) (A2P)
R2-11T,12T	Thermistor (coil)
R2-2T	Thermistor (coil)
R3-11T-13T	Thermistor (discharge)
R4-11T-13T	Thermistor (header)
R6-1T	Thermistor (suction)
SENPH	Pressure sensor (high)
SENPL	Pressure sensor (low)
S1PH-3PH	Pressure switch (high)
TB1,2	Terminal circuit board (relay)
T1R,2R	Transformer (220-240V/22V)
X1M	Terminal strip (power)
X2M	Terminal strip (control)
X3M	Terminal strip (relay)
Y1E-3E	Electronic expansion valve
Y1R	4 way valve
Y1S	Solenoid valve (auxiliary condenser)
Y2S	Solenoid valve (hotgas)
Y3S	Solenoid valve (injection M1C)
Y4S	Solenoid valve (injection M2C)
Y5S	Solenoid valve (receiver)
Y6S	Solenoid valve (injection M3C)
Z1F-6F	Noise filter(surge absorber)
(D M)	Diode module
(P C)	Power circuit
(P M)	Power module
(PRC)	Phase reversal detect circuit
(S D)	Safety devices input
	Field wiring
L1,L2,L3	Live
N	Neutral
	Connector
○	Wire clamp
	Protective earth (screw)
Colours	BLK : Black BLU : Blue BRN : Brown GRY : Gray ORG : Orange PNK : Pink RED : Red WHT : White YLW : Yellow

Все каталоги и инструкции здесь: https://splitsystema48.ru/instrukcii-po-ekspluatacii-kondicionerov.html

Si33-102.book Page 154 Tuesday, June 26, 2001 3:18 PM

7.3 Optional Parts Cool/Heat Selector

SS1 ..... Selector switch (fan, cool/heat)
SS2 ..... Selector switch (cool/heat)

Notes:

- Use copper conductors only.
- When using the adaptor for sequential start, refer to chapter “Examples”.
- For connection wiring to outdoor-outdoor transmission F1-F2, outdoor-indoor transmission F1-F2, refer to chapter “Examples”.
- For connection wiring to the central remote control, refer to the installation manual of the central remote control.
- Use insulated wire for the power cord.

Все каталоги и инструкции здесь: https://splitsystema48.ru/instrukcii-po-ekspluatacii-kondicionerov.html

Si33-102.book Page 155 Tuesday, June 26, 2001 3:18 PM

7.4 Power Circuit and Cable Requirements

A power circuit (See table below) must be provided for connection of the unit. This circuit must be protected with the required safety devices, i.e. a main switch, a slow blow fuse on each phase and an earth leak detector.

	Phase and Frequency	Voltage	Recommended Fuses	Transmission Line Selection
RSXY16KAY1	3N~50Hz	380-415V	45A	0.75-1.25mm²
RSXY18KAY1	3N~50Hz	380-415V	50A	0.75-1.25mm²
RSXY20KAY1	3N~50Hz	380-415V	60A	0.75-1.25mm²
RSXY24KAY1	3N~50Hz	380-415V	60A	0.75-1.25mm²
RSXY26KAY1	3N~50Hz	380-415V	70A	0.75-1.25mm²
RSXY28KAY1	3N~50Hz	380-415V	70A	0.75-1.25mm²
RSXY30KAY1	3N~50Hz	380-415V	70A	0.75-1.25mm²

	Phase and Frequency	Voltage	Recommended Fuses	Transmission Line Selection
RSXY16KAYAL	3N~60Hz	380V	45A	0.75-1.25mm²
RSXY18KAYAL	3N~60Hz	380V	50A	0.75-1.25mm²
RSXY20KAYAL	3N~60Hz	380V	60A	0.75-1.25mm²
RSXY24KAYAL	3N~60Hz	380V	60A	0.75-1.25mm²
RSXY26KAYAL	3N~60Hz	380V	70A	0.75-1.25mm²
RSXY28KAYAL	3N~60Hz	380V	70A	0.75-1.25mm²
RSXY30KAYAL	3N~60Hz	380V	80A	0.75-1.25mm²

When using residual current operated circuit breakers, be sure to use a high-speed type 200mA rated residual operating current.

Note: Select the power supply cable in accordance with relevant local and national regulations.

Все каталоги и инструкции здесь: https://splitsystema48.ru/instrukcii-po-ekspluatacii-kondicionerov.html

Si33-102.book Page 156 Tuesday, June 26, 2001 3:18 PM

7.5 General

- Make sure to connect the power source wire to the power source terminal block and to clamp it as shown in figure, chapter “Field line connection” on page 157.
- As this unit is equipped with an inverter, installing a phase advancing capacitor not only will deteriorate power factor improvement effect, but also may cause capacitor abnormal heating accident due to high-frequency waves. Therefore, never install a phase advancing capacitor.
- Keep power imbalance within 2% of the supply rating.

1. Large imbalance will shorten the life of the smoothing capacitor.
2. As a protective measure, the product will stop operating and an error indication will be made, when power imbalance exceeds 4% of the supply rating.

- Follow the “electrical wiring diagram” when carrying out any electrical wiring.
- Only proceed with wiring work after blocking off all power.
- Always ground wires. (In accordance with national regulations of the pertinent country.)
- Do not connect the ground wire to gas pipes, sewage pipes, lightning rods, or telephone ground wires.
  Gas pipes: can explode or catch fire if there is a gas leak.
  Sewage pipes: no grounding effect is possible if hard plastic piping is used.
  Telephone ground wires and lightning rods: dangerous when struck by lightning due to abnormal rise in electrical potential in the grounding.
- This unit uses an inverter, and therefore generates noise, which will have to be reduced to avoid interfering with other devices. The outer casing of the product may take on an electrical charge due to leaked electrical current, which will have to be discharged with the grounding.
- Be sure to install an earth leak detector. (One that can handle higher harmonics.)
  (This unit uses an inverter, which means that an earth leak detector capable handling high harmonics in order to prevent malfunctioning of the earth leak detector itself.)
- Earth leak detector which are especially for protecting ground-faults should be used in conjunction with main switch or fuse for use with wiring.
- This unit has a negative phase protection circuit. (If it operates, only operate the unit after correcting the wiring.)

Все каталоги и инструкции здесь: https://splitsystema48.ru/instrukcii-po-ekspluatacii-kondicionerov.html

Si33-102.book Page 157 Tuesday, June 26, 2001 3:18 PM

7.6 Examples

7.6.1 System Example

RSXY16,18,20

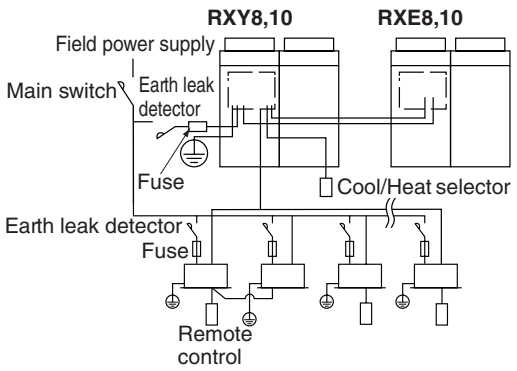

RSXY24,26,28,30

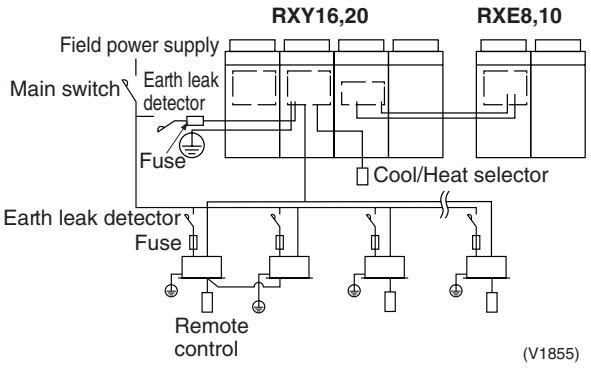

7.6.2 Field Line Connection

L1, L2, L3, N-phase of the power cord should be clamped to the safety catch using the included clamp material.

The green and yellow striped wrapped wires should be used for grounding.

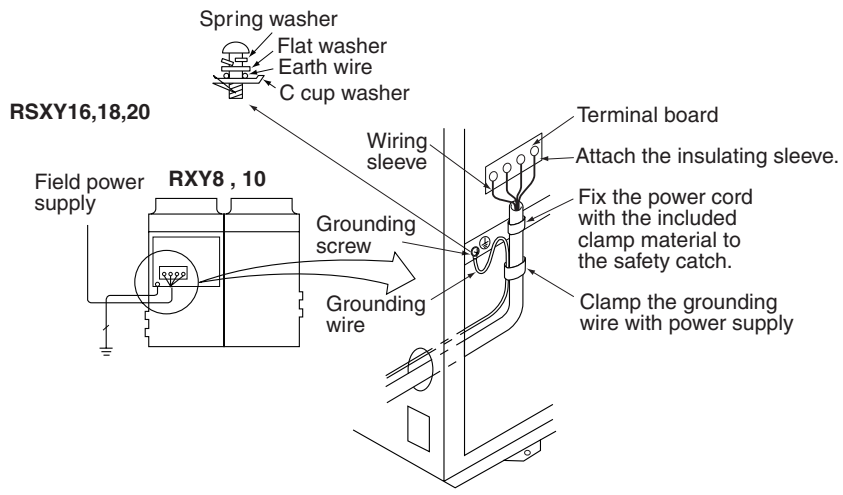

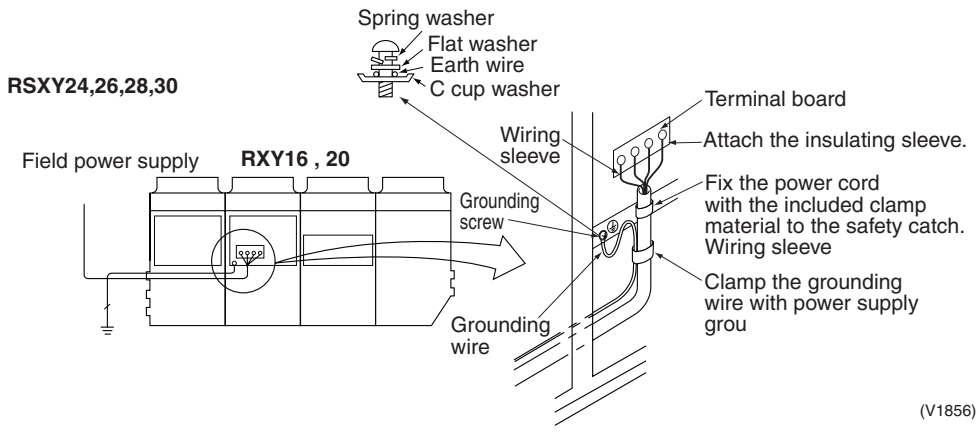

Все каталоги и инструкции здесь: https://splitsystema48.ru/instrukcii-po-ekspluatacii-kondicionerov.html

Si33-102.book Page 158 Tuesday, June 26, 2001 3:18 PM

7.6.3 Field Line Connection between Main Unit (RXY-) and Sub Unit (RXE-)

Caution In the event that the main unit and the sub unit are separated by 1000 mm or more, the attached cables cannot be used. The wiring between the outdoor units should be connected by extending the attached cable using the included connectors.
The connector must be wired to be inside the switch box.

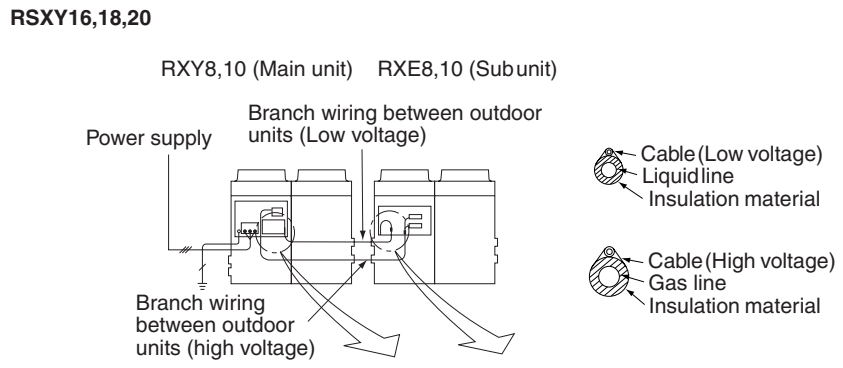

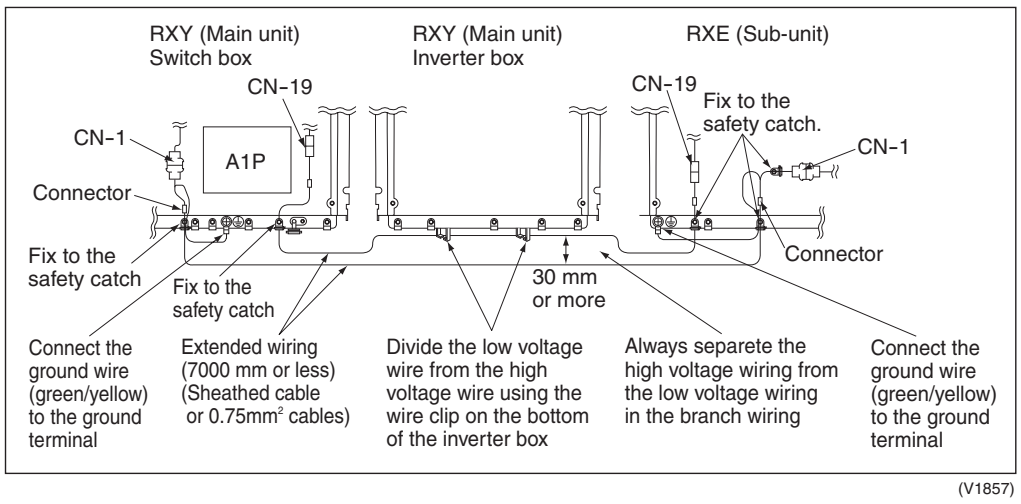

(V1857)

Все каталоги и инструкции здесь: https://splitsystema48.ru/instrukcii-po-ekspluatacii-kondicionerov.html

Si33-102.book Page 159 Tuesday, June 26, 2001 3:18 PM

RSXY24,26,28,30

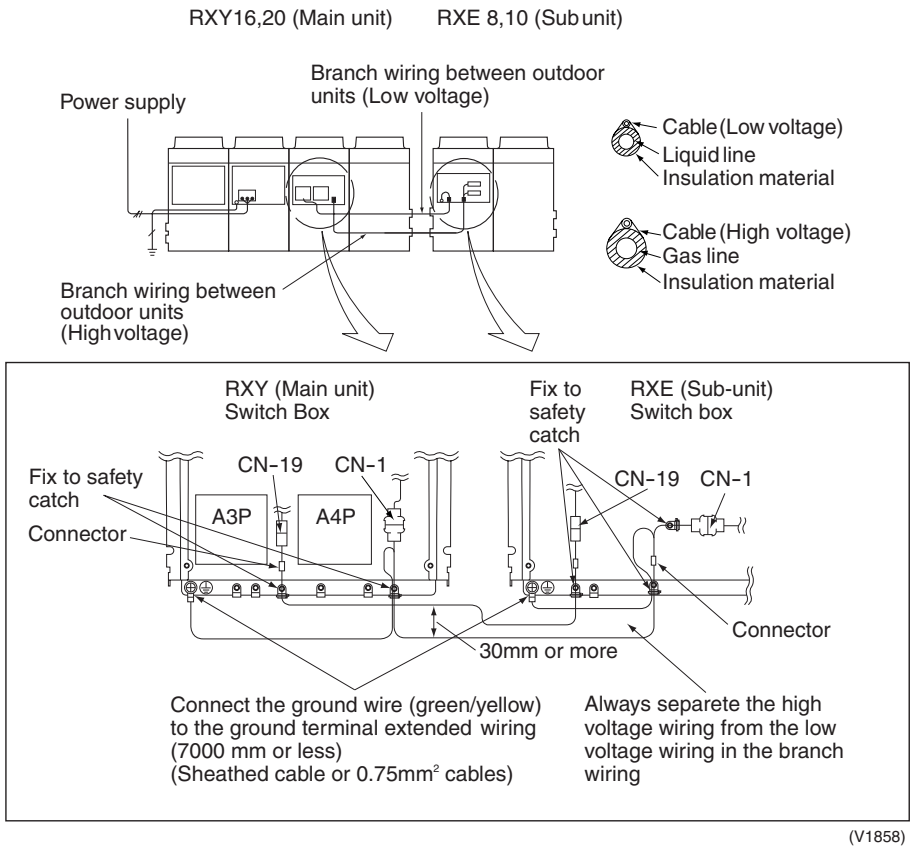

7.6.4 Field Line Connection : Transmission Wiring and Cool/Heat Selection

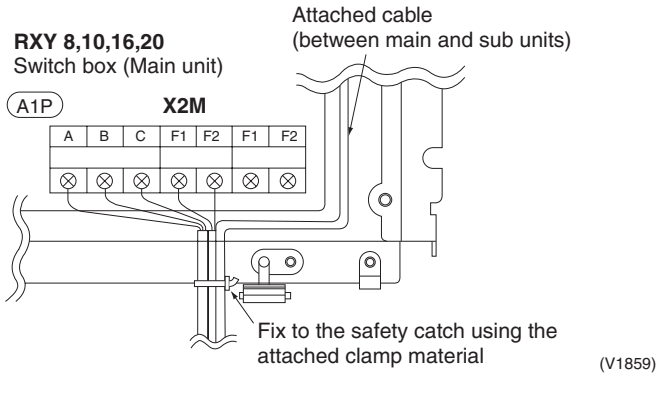

Все каталоги и инструкции здесь: https://splitsystema48.ru/instrukcii-po-ekspluatacii-kondicionerov.html

Si33-102.book Page 160 Tuesday, June 26, 2001 3:18 PM

7.6.5 Example of Performing Cool/Heat with Cool/Heat Selector

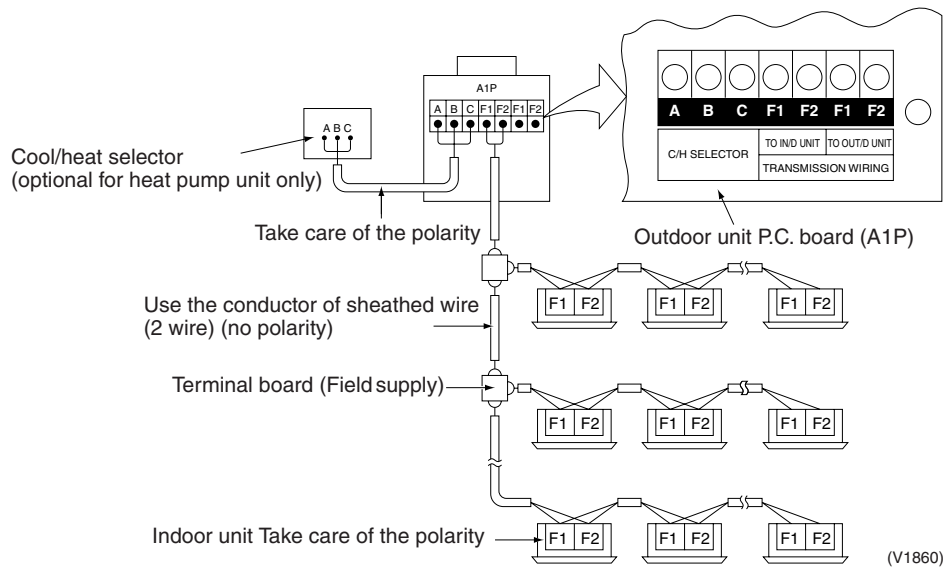

7.6.6 Example of Performing Cool/Heat Setting of Two or More Outdoor Units in Block with Cool/Heat Selector

- For the wiring shown in above figure, be sure to use 0.75-1.25 mm² vinyl cords with sheath or cables (two-core). (Three-core cables can be used only for the cool/heat selector.) (Insulated thickness : 1mm or more)
- The wires shown in above figure are field supply.

Caution Be sure to follow the limits below. If the unit-to-unit cables are beyond these limits, it may result in malfunction of transmission.
Maximum wiring length: 1000m
Total wiring length: 2000m
Max branches No. of branches: 16

Up to 16 branches are possible for unit-to unit cabling. No branching is allowed after branching.

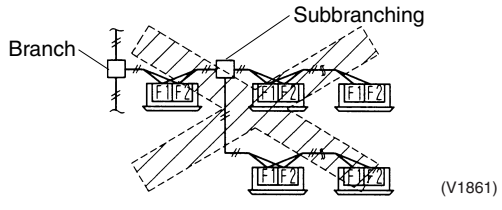

Never connect the power supply to unit-to-unit cabling terminal block. Otherwise the entire system may break down.

7.6.7 Sequential Start

Make the outdoor unit cable connections shown below.
The outdoor unit PC board (A1P) is factory set at “Sequential start available”.

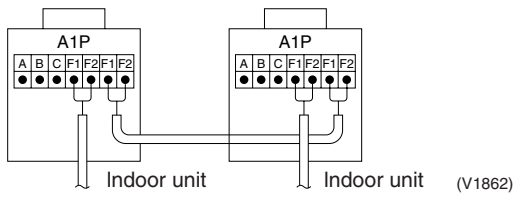

Все каталоги и инструкции здесь: https://splitsystema48.ru/instrukcii-po-ekspluatacii-kondicionerov.html

Si33-102.book Page 161 Tuesday, June 26, 2001 3:18 PM

7.6.8 Setting the Cool/Heat Operation

1. Performing cool/heat setting with the remote control connected to the indoor unit.
   Keep the cool/heat selector switch (SS1) on the outdoor unit PC board (A1P) at the factory setting position IN/D UNIT.

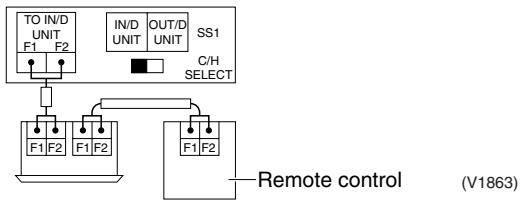

2. Performing cool/heat setting with the cool/heat selector.
   Connect the cool/heat selector remote control (optional) to the A/B/C terminals and set the cool/heat selector switch (SS1) on the outdoor unit PC board (A1P) to OUT/D UNIT.

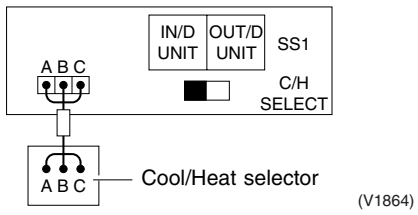

Caution For low-noise operation, it is necessary to get the optional “External control adaptor for outdoor unit”. For details, see the installation manual attached to the adaptor or service manual Si33-101.

Все каталоги и инструкции здесь: https://splitsystema48.ru/instrukcii-po-ekspluatacii-kondicionerov.html

Si33-102.book Page 162 Tuesday, June 26, 2001 3:18 PM

7.6.9 Picking Power Line and Transmission Line

- Be sure to let the power line and the transmission line pass through a conduit hole.
- Pick the power line from the upper hole on the left side plate, from the front position of the main unit (through the conduit hole of the wiring mounting plate - optional parts) or from a knock out hole to be made in the unit's bottom plate.

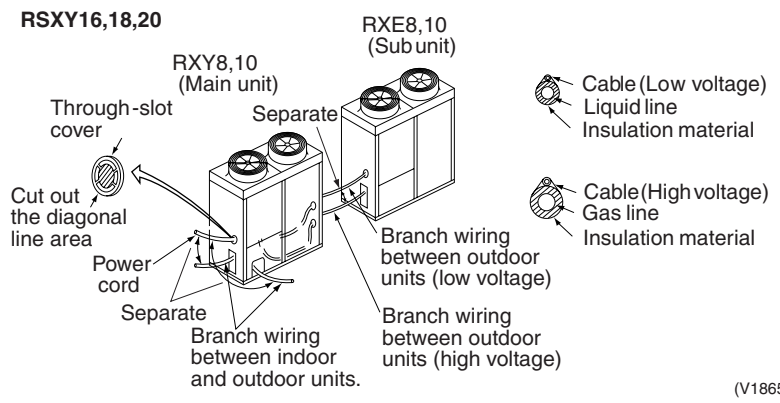

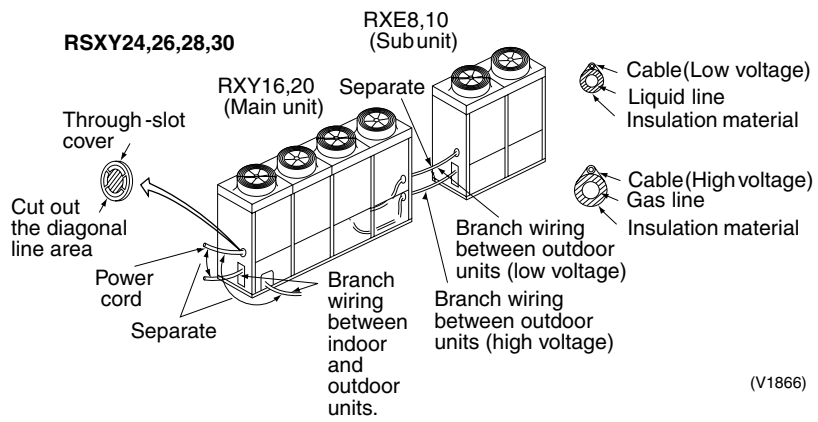

- If you pick the power line from the front position of the unit, proceed as follows and refer to figure:
  - Remove the lower frontplate (1), punch a hole in the knock hole and cut the hole (2) all the way to the slit.
  - Attach the 3 sealing pads (optional parts) (3) on the wiring mounting plate (optional parts) (4) corresponding to the overlapped area of the front plate.
  - Install the wiring mounting plate to the front side of the side plate with the 2 delivered screws.

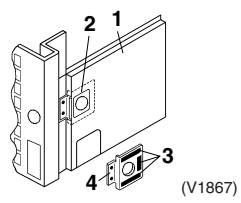

- Pick the transmission line from the middle positioned conduit hole on the left side plate, or from the front position of the main unit (after binding it to the piping with finishing tape as in below figure).

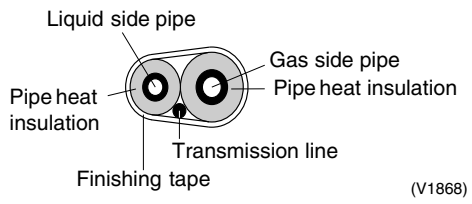

Caution Be sure to keep the power line and transmission line apart from each other.
Be careful about polarity of the transmission line.
Make sure that the transmission line is clamped as shown in the figure in chapter "Field line connection".
Check that wiring lines do not make contact with refrigerant piping.
Firmly close the lid and arrange the electrical wires so as to prevent the lid or other parts from coming loose.

Все каталоги и инструкции здесь: https://splitsystema48.ru/instrukcii-po-ekspluatacii-kondicionerov.html

Si33-102.book Page 163 Tuesday, June 26, 2001 3:18 PM

8. Before Operation

8.1 Checks before Initial Start-Up

Caution Make sure that the circuit breaker on the power supply panel of the installation is switched off.

After the installation, check the following before switching on the circuit breaker:

1. **The position of the switches that require an initial setting**
   Make sure that switches are set according to your application needs before turning the power supply on.

2. **Power supply wiring and transmission wiring**
   Use a designated power supply and transmission wiring and make sure that it has been carried out according to the instructions described in this manual, according to the wiring diagrams and according to local and national regulations.

3. **Pipe sizes and pipe insulation**
   Make sure that correct pipe sizes are installed and that the insulation work is properly executed.

4. **Additional refrigerant charge**
   Keep record of the additional refrigerant charged by filling it out on the sticker on the rear of the upper front panel.

5. **Insulation test of the main power circuit**
   Using a megatester for 500V, check that the insulation resistance of 2MΩ or more is attained by applying a voltage of 500V DC between power terminals and earth. Never use the megatester for the transmission wiring.

Все каталоги и инструкции здесь: https://splitsystema48.ru/instrukcii-po-ekspluatacii-kondicionerov.html

Si33-102.book Page 164 Tuesday, June 26, 2001 3:18 PM

8.2 Test Run

8.2.1 Operation of Stop Valve

Keep all stop valves fully open. (Refer to chapter “How to operate stop valves”.)

8.2.2 Power Supply Connection

Caution In order to avoid compressor damage, it is necessary to switch on the crankcase heater for **at least six hours** before starting the compressor after a long period of standstill or for the first time.
Set all the initial settings for the test run with the power on. Be careful not to touch, under any circumstances, any button other than the push button switches (BS1-5) on the PCB(XIA) when making settings. Doing so can cause electrical shocks.

- To switch on the crankcase heater, turn on the circuit breaker.
- Set the LED on the outdoor unit PC board after turning on the circuit breaker.
- Before switching on the indoor unit(s), refer to the operation manual of the corresponding unit(s) for more details.
- Turn on the switch to indoor unit(s).
- The test run must be performed starting with cooling operation.
  Start this operation about 8 minutes after turning on the indoor unit and outdoor unit power.

Note:
- Do not try to get started with the remote control just after turning on the power. The remote control shows “UH” and the system fails to start.
  When the outdoor temperature is below –5˚C, perform the testrun in heating mode.

8.2.3 Operation Check - Temperature Regulating Operation Check

1. Perform the cross wiring - cross piping check as described in “CAUTIONS ON OPERATION” attached on the rear of the upper front panel.
2. Set the unit to “ ❄ ” mode using the cool/heat selector (heatpump units only) or the indoor remote control.
3. Press the “ TEST ” button 4 times to set the unit to “ TEST ” mode operation. (“ TEST ” is displayed.)
   Pressing the “ TEST ” button 5 times will make the unit return to its normal operation mode.
4. Within 10minutes after having set the unit to test mode, press the “ ⏻ ” button to start the test operation. Check if the indoor and outdoor units are operating normally. If, due to compressor liquid compression, a knocking noise is heard, stop the unit immediately and start it again after a while. The test run will be stopped automatically after 30 minutes.
5. Press the “ ⏻ ” button to stop the unit.
6. Perform normal operation. Refer to the operation manual of the corresponding indoor unit(s) for details.

- Check that cool air (or hot, in case of heating operation of heatpump units) is blown from the indoor unit.
- Operate each indoor unit individually and check whether the corresponding outdoor unit is running.

Caution Blinking of the remote control operation lamp means that an error occurred. The error code is displayed in the liquid crystal display and the relation between error codes and their meaning is shown in “CAUTIONS IN SERVICING” attached to the indoor unit.
The compressor is protected by a guard timer and will not restart, not even if the “ ⏻ ” button of a connected indoor unit is pressed, before the guard timer setting of 5 minutes elapsed.
Pump down operation cannot be executed because this would result in serious compressor damage.

Refer the “detail of error code display” to service manual Si33-101.

Все каталоги и инструкции здесь: https://splitsystema48.ru/instrukcii-po-ekspluatacii-kondicionerov.html

Si33-102.book Page 165 Tuesday, June 26, 2001 3:18 PM

8.2.4 How to Operate Stop Valves

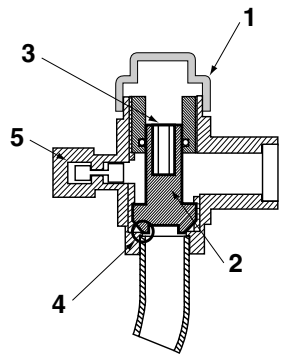

1. To Open

1. Remove the cap (1) and turn the shaft (2) counterclockwise with hexagon socket screw keys (JIS B 4648 nominal size 6 mm and 10 mm).
2. Turn it all the way until the shaft stops.
3. Tighten the cap firmly.

2. To Close

1. Remove the cap and turn the shaft clockwise.
2. Tighten the shaft firmly until it reaches the sealed area (4) of the body.
3. Tighten the cap firmly.

Notes:

- Refer to the table at the end of this chapter for tightening torques and dimensions of the flares.
- Be sure to use both, a spanner and a torque wrench, when connecting or disconnecting pipes to or from the unit. (Refer to next page)
- When connecting a flare nut, apply ether or ester oil on the flare area (both internal and external face), and screw it with your hand a few times first.
- Use a charging hose with push rod when using the service port (5).
- Check for refrigerant gas leakage after tightening the cap.
- Make sure to apply the refrigerant oil around the flare portions (both inner and outer face) when connecting flare nuts, and give 3 turns by hand before applying spanners.
- Make sure to keep stop valve open during operation.

FLARE SHAPE and FLARENUT TIGHTENING TORQUE

Pipe Size	Tightening Torque (N·m)	A (mm)	Flare Shape
ϕ6.4	14.2-17.2	8.3-8.7	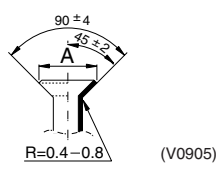
ϕ9.5	32.7-39.9	12.0-12.4	
ϕ12.7	49.5-60.3	15.4-15.8	
ϕ15.9	61.8-75.4	18.6-19.2	
ϕ19.1	97.2-118.6	22.9-23.3	

Not recommendable but in case of emergency

You must use a torque wrench but if you are obliged to install the unit without a torque wrench, you may follow the installation method mentioned below.

After the work is finished, make sure to check that there is no gas leak.

Все каталоги и инструкции здесь: https://splitsystema48.ru/instrukcii-po-ekspluatacii-kondicionerov.html

Si33-102.book Page 166 Tuesday, June 26, 2001 3:18 PM

When you keep on tightening the flare nut with a spanner, there is a point where the tightening torque suddenly increases. From that position, further tighten the flare nut the angle shown below:

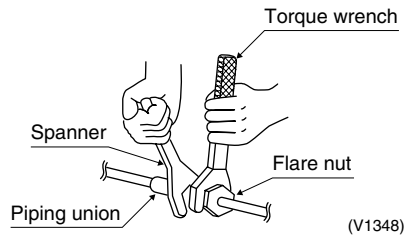

Pipe size	Further tightening angle	Recommended arm length of tool
6.4 (1/4”)	60 to 90 degrees	Approx. 150mm
9.5 (3/8”)	60 to 90 degrees	Approx. 200mm
12.7 (1/2”)	30 to 60 degrees	Approx. 250mm
15.9 (5/8”)	30 to 60 degrees	Approx. 300mm
19.1 (3/4”)	20 to 35 degrees	Approx. 450mm

8.2.5 Misswiring Check Operation

(Refer to the “CAUTION ON OPERATION” on the PCB (A1P) on the outdoor unit for settings. Operation will not be possible immediately after power is turned on (until the LED H2P goes off: up to 12 minutes).

1. Use monitor mode to check the number of indoor units connected.

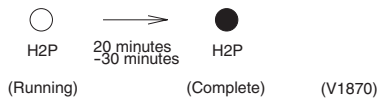

2. Press the “Wiring check” button for 5 seconds after returning to setting mode 1, and carry out the miswiring check operation. The LED H2P will light up during operation and go out when complete.
3. After completion of operation, wait about one minute, and then use monitor mode to check the number of indoor units connected again to see whether the number is the same as before. If it is not, the difference represents the number of indoor units whose wiring has been done incorrectly. Use the operation remote control to operate the indoor units, and correct the wiring on units which display “UF” on the remote control.

How to monitor the number of “MODE” connected indoor units.

1 Enter monitor mode by pressing the “MODE” button once.	H1P H2P H3P H4P H5P H6P H7P
2 Press the “SET” button until the LEDs (H2P through H7P) are as shown at right.	
3 Pressing the “RETURN” button once will display the number of indoor units on the LED display (H2P through H7P). (Binary display: example shows 7 units.)	
4 Press the “MODE” button to return to set mode 1. (The example at right shows the status when shipped from the factory.)	

(V0909)

8.2.6 Disposal Requirements

Dismantling of the unit, treatment of the refrigerant, oil and eventual other parts, should be done in accordance with the relevant local and national regulations.

Все каталоги и инструкции здесь: https://splitsystema48.ru/instrukcii-po-ekspluatacii-kondicionerov.html

Si33-102.book Page 167 Tuesday, June 26, 2001 3:18 PM

9. Caution for Refrigerant Leaks

9.1 Caution for Refrigerant Leaks

9.1.1 Introduction

The installer and system specialist shall secure safety against leakage according to local regulations or standards. The following standards may be applicable if local regulations are not available.

The VRV System, like other air conditioning systems, uses R-22 as its refrigerant. R-22 itself is an entirely safe non-toxic, non-combustible refrigerant. Nevertheless care must be taken to ensure that the air conditioning facilities are installed in a room which is sufficiently large to avoid a dangerous concentration of refrigerant gas in the unlikely event of a serious leak in the system. The KHK (High Pressure Gas Protection Association, in Japan) has established its own standard in respect of refrigerant gas concentrations for inclusion with the general standards covering refrigeration and air conditioning facilities.

9.1.2 Maximum Concentration Level

Dangerous concentration

Dangerous concentration means the maximum concentration of CFC gas which can be dealt quickly and with without damage to the person in the case of a leak of refrigerant into the air. The unit of measurement of the dangerous concentration is kg/m³ (the weight in kg of CFC gas in 1m³ of air) for ease of calculation.

Dangerous concentration of R-22 : 0.3kg/m³

(KHK facility standard : S0010)

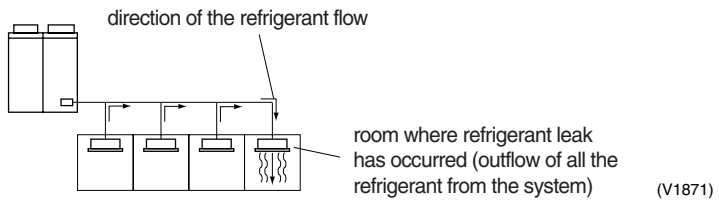

Pay a special attention to the place, such as a basement, etc. where refrigerant can stay, since refrigerant is heavier than air.

Все каталоги и инструкции здесь: https://splitsystema48.ru/instrukcii-po-ekspluatacii-kondicionerov.html

Si33-102.book Page 168 Tuesday, June 26, 2001 3:18 PM

9.1.3 Procedure for Checking Maximum Concentration

Check the maximum concentration level in accordance with steps 1 to 4 below and take whatever action is necessary to comply.

Step 1

Calculate the amount of refrigerant (kg) charged to each system separately.

amount of refrigerant in a single unit system (amount of refrigerant with which the system is charged before leaving the factory)	+	additional charging amount (amount of refrigerant added locally in accordance with the length or diameter of the refrigerant piping)	=	total amount of refrigerant (kg) in the system

Note:
- Where a single refrigerant facility is divided into 2 entirely independent refrigerant systems then use the amount of refrigerant with which each separate system is charged.

Step 2

Calculate the smallest room volume (m^3)
Incase like the following, calculate the volume of (A), (B) as a single room or as the smallest room.

A. Where there are no smaller room divisions

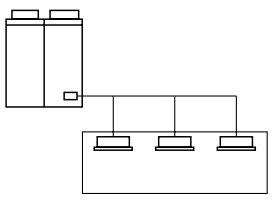

(V1872)

B. Where there is a room division but there is an opening between the rooms sufficiently large to permit a free flow of air back and forth.

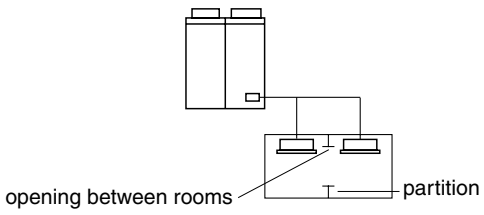

(V1873)

(Where there is an opening without a door or where there are openings above and below the door which are each equivalent in size to 0.15% or more of the floor area.)

Step 3

Calculating the refrigerant density using the results of the calculations in steps 1 and 2 above.

$$\frac{\text{total volume of refrigerant in the refrigerant system}}{\text{size } (m^3) \text{ of smallest room in which there is an indoor unit installed}} \leq \text{maximum concentration level } (kg/m^3)$$

If the result of the above calculation exceeds the maximum concentration level then make similar calculations for the second then third smallest room and so until the result falls short of the maximum concentration.

Step 4

Dealing with the situations where the result exceeds the maximum concentration level.
Where the installation of a facility results in a concentration in excess of the maximum concentration level then it will be necessary to revise the system.
Please consult your Daikin supplier.

Все каталоги и инструкции здесь: https://splitsystema48.ru/instrukcii-po-ekspluatacii-kondicionerov.html

Si33-102.book Page i Tuesday, June 26, 2001 3:18 PM

Index

Symbols

"88" cannot be cleared from the central remote control 124

A

Additional Charge of Refrigerant 34, 100
Additional Refrigerant Charge 150
Additional Refrigerant Charge Operation 81
Air Tight Test 27
Allowable Piping Length 97

B

Brazing 21

C

Centralized Control Group No. Setting 89
Checks before Initial Start-Up 163
Code No. 86
Combination 130
Connecting the Refrigerant Piping 143
Control Modes 91
Control Wiring 51
Cool/Heat Mode Selection 72
Cool/Heat Operation 161
Cracks develop in field pipes due to thermal expansion and contraction 123

D

Demand Control 78
Drain Pipe Gradient and Support 34
Drain pipe trap shape defective 120
Drain Pipe Work (Indoor) 34
Drain Piping for Each Model
- FXYA-Wall mounted unit 50
- FXYB-Concealed ceiling unit (small) 47
- FXYC-2-way blow ceiling mounted cassette ...37
- FXYD-Ceiling Mounted Duct Type (Low Silhouette Type) 43
- FXYF-4-way blow ceiling mounted cassette 39
- FXYH-Ceiling suspended unit 49
- FXYK-ceiling mounted corner cassette 41
- FXYLM-Concealed floor standing unit 50
- FXYM-Concealed ceiling unit (large) 48
- FXYM-KF-Outdoor Air Processing Unit 51
- FXYS-Concealed ceiling unit 45

Drain Trap 35

E

Electrical Specifications 136
Electrical Work 51
Excessive noise due to incorrect angling of REFNET joints 122

F

Field Line Connection 157
Field Setting 87
Field Wiring 151
Flange Connection 25
Flare Connection 22
Flaring Procedure 23

G

Grouped Drain Piping 35

H

Hand Over to Customer 96

I

Indoor Field Setting 83
Infrared Remote — Indoor Unit 85
Installation 12
Installation of Indoor Unit 14
Installation of Outdoor Unit 55
Internal Wiring 152

L

Leak Test 148
Low Noise Operation 77

M

Main Components 137
Mismatch between cables connecting indoor and outdoor units and corresponding piping 119
Misswiring Check Operation 166
Mode Change 65
Monitor Mode 70

O

Operation Mode 91
Operation when Power is Turned On 62
Optional Accessories 134
Optional Parts Cool/Heat Selector 154

P

PC Board Ass'y
- Outdoor Unit 63

Picking Power Line and Transmission Line 162
Pipe Insulation 149
PIPE SIZE REDUCER 106
Piping Diameter for Grouped Drain Pipes 37
Piping Kits for Side and Bottom Piping 107
Piping System Diagrams
- Indoor Unit 113
- Outdoor Units 114

Power Circuit and Cable Requirements 155
Power Supply 52
Power Supply Connection 164
Pressure down despite absence of leaks during air tight test 121
Pushbutton Switches 65

Все каталоги и инструкции здесь: https://splitsystema48.ru/instrukcii-po-ekspluatacii-kondicionerov.html

Si33-102.book Page ii Tuesday, June 26, 2001 3:18 PM

R

REFNET HEADER 104
REFNET header 108, 122
REFNET JOINT 103
REFNET Joint 145
REFNET joint 108
REFNET joints 122
Refrigerant Leaks 93, 167
Refrigerant Pipe Size 98
Refrigerant Pipe Work 15
Refrigerant Piping 141
Refrigerant Recovery Mode 82

S

Selection of Location 138
Selection of Piping Material 142
Sequential Start 79, 160
Service Mode 87
Service Space 57
Setting Contents 86
Setting Items 68
Setting Mode 1 67
Setting Mode 2 68
Setting Modes 65
Short Circuits 57
Signal interference due to use of
multiple core cable 118
Sleeve and Insert Work 13
Snow Accumulation 58
Standard Operation Limit 131
Standard Supplied Accessories 132
Step by Step Installation Procedure 12
Stop Valve 164
Stop Valves 165

T

Technical Specifications 135
Test Operation 60
Test Run 164
The centralized control group number
cannot be set 124
Thermal Insulation Work 26
Transmission wiring between the cool/heat selector
and the outdoor unit is too close to
a high voltage wire 124

V

Vacuum Drying 29, 148
VRV Inspection Sheet 109

W

Wired Remote Control –
Heat Recovery Ventilation <BRC301B61> 84
Wired Remote Control <BRC1A61(51)> 83
Wiring Check Operation 80
Wiring Diagrams 116

Все каталоги и инструкции здесь: https://splitsystema48.ru/instrukcii-po-ekspluatacii-kondicionerov.html

Si33-102.book Page iii Tuesday, June 26, 2001 3:18 PM

Drawings & Flow Charts

Symbols

"88" cannot be cleared from the central remote control 124

A

Additional Charge of Refrigerant
Operational steps 34
Additional Refrigerant Charge 150
Air Tight Test
Checking for Leaks 28
Compensating adjustment value 27
Operational steps 27
Air Tight Test and Vacuum Drying 148
Allowable Piping Length 97

B

Brazing 21

C

Calibration method 31
Caution for Refrigerant Leaks 93
Centralized Control Group No. Setting
BRC1A51·52 89
BRC7A Type 89
BRC7C (4C) Type 90
Group No. Setting Example 90
Check points 9
Choice of Materials for Refrigerant Piping 19
Coat the flange sheet surface with refrigeration oil 25
Coat the inner and outer surface of the flare with refrigerator oil 22
Connect the reducers to the branch piping kit, KHRP26K75T 106
Connecting the Refrigerant Piping
Bottom Connection 144
Front Connection 143
Piping between Main Unit (RXY-) and Sub Unit (RXE-) 145
Piping Installation 143
REFNET Joint 145
Refrigerant Pipe Flushing 146
Contents of Control Modes
How to Select Operation Mode 91
Contract Drawing 9
Control circuit diagram 11
Cool / Heat Mode Selection
Setting Method 76
Setting of Cool / Heat by Individual Outdoor Unit System by Cool/Heat Selector 73
Setting of Cool / Heat by Individual Outdoor Unit System by Indoor Unit Remote Control 72
Setting of Cool / Heat by Outdoor Unit System Group in Accordance with Group Master Outdoor Unit by Indoor Unit Remote Control 74
Supplement 75
Correlation of nozzle tip and size of refrigeration piping 20
Covering of Refrigerant Pipes
Particular care 17
Pinching method 17
Taping method 17
Cracks develop in field pipes due to thermal expansion and contraction 123

D

Dealing with situations where the result exceeds the dangerous concentration level 95
Degree of vacuum 30
Demand Control System Example 78
Drain pipe trap shape defective 120
Drain Pipe Work (Indoor)
Drain Pipe Gradient and Support 34
Drain Trap 35
Grouped Drain Piping 35
Operational steps 34
Use of an Auxiliary Drain Hose (Flexible) 36
Duct Work (Indoor)
Operational steps 54
Taking Account of Noise and Vibration 54

E

Electrical Work
a PCB for remote control, multiple core cable must not be used 52
Choosing a circuit breaker 52
Earthing 54
When cable more than 1.25 mm² is used 52
Example of Connection 169
Example of Performing Cool/Heat Setting of Two or More Outdoor Units in Block with Cool/Heat Selector 160
Example of Performing Cool/Heat with Cool/Heat Selector 160
Example of refrigerant branch using REFNET header for RSXY28 102
Example of refrigerant branch using REFNET joint and REFNET header for RSXY28 102
Example of refrigerant branch using REFNET joint for RSXY28 102
Excessive noise due to incorrect angling of REFNET joints 122

F

Field Line Connection 157
Field Line Connection between Main Unit (RXY-) and Sub Unit (RXE-) 158
Flare Connection 22
Flaring Procedure 23

Все каталоги и инструкции здесь: https://splitsystema48.ru/instrukcii-po-ekspluatacii-kondicionerov.html

Si33-102.book Page iv Tuesday, June 26, 2001 3:18 PM

FXYA-Wall mounted unit 50
FXYB-Concealed ceiling unit (small) 47
FXYC-2-way blow ceiling mounted cassette
After piping work is finished, check drainage flows smoothly 38
If converging multiple drain pipes 38
Install the drain raising pipes at a right angle to the indoor unit 38
Insulate the drain hose inside the building 38
To keep the drain hose from sagging 37
WHEN ELECTRIC WIRING WORK IS NOT FINISHED 39
FXYD-Ceiling Mounted Duct Type (Low Silhouette Type)
After piping work is finished, check drainage flows smoothly 44
HOW TO INSTALL PIPING 44
If unifying multiple drain pipes 44
Keep piping as short as possible and slope it downwards 43
FXYF-4-way blow ceiling mounted cassette
If converging multiple drain pipes 40
Install the drain raising pipes at a right angle to the indoor unit 40
Insulate the drain hose inside the building 40
The incline of attached drain hose 40
To keep the drain hose from sagging 39
WHEN ELECTRIC WIRING WORK IS NOT FINISHED 41
FXYH-Ceiling suspended unit 49
FXYK-ceiling mounted corner cassette
Adjust the drain raising height by turning the drain raising pipe 42
If construction work for interconnecting piping is complete 42
if laying central drain piping 42
Insulate the drain hose inside the building 41
Keep piping as short as possible and slope it downwards 41
Secure a downward gradient of 1/100 or more for the drain pipe 42
WHEN ELECTRIC WIRING WORK IS NOT FINISHED 43
FXYLM-Concealed floor standing unit 50
FXYM-Concealed ceiling unit (large) 48
FXYS-Concealed ceiling unit
After piping, check to make sure draining flows smoothly 46
HOW TO INSTALL PIPING 45
If the drain hose cannot be sufficiently set on a slope 45
If unifying multiple drain pipes 45
Keep piping as short as possible and slope it downwards 45
WHEN ELECTRIC WIRING WORK IS NOT FINISHED 46

H

Hand Over to Customer
Important Points 96
Make the service contact address clear 96
Operational Steps 96
Heat Pump System Example 100
How these installation problems affect an equipment 7
How to Operate Stop Valves 165

I

Infrared Remote — Indoor Unit
BRC7A type 85
BRC7C (4C) type 85
Inspecting and Handling the Unit 139
Installation of Indoor Unit
Example: Ceiling mounted cassette unit (FXYC63K) 14
Operational steps 14
Positioning 14
Installation of Outdoor Unit
An inverter air conditioner may cause electronic noise generated from AM broadcasting 59
Bolt pitch 55
Foundation of Units 55
Operational steps 55
Points relating to design of snow hood 58
Prevention of Short Circuits 57
Remove the yellow shipping stays from the compressor support 57
Selection of Location 59
Service Space 57
Unpacking and Placing the Unit 56

L

Low Noise Control System Example 77

M

Maximum Concentration Level 167
Mismatch between cables connecting indoor and outdoor units and corresponding piping 119
Misswiring Check Operation 166

O

Outdoor Air Processing Unit (FXYM-KF)
Example drain trap installation 51
If installing central drain piping 51
Outdoor Unit PC Board Ass'y
Function of setting between cooling and heating 64
Function setting mode switch and LED 64
Outdoor Unit 63
Outdoor unit Capacity setting switch 64
Service monitor LED 64
Transmission terminal 64
Outline of New Series Products
Feature (2) 3
Feature (3) 3
Individual control of up to 20 indoor units with one 20HP class outdoor unit 4
Long refrigerant piping 4
System outline 3

Все каталоги и инструкции здесь: https://splitsystema48.ru/instrukcii-po-ekspluatacii-kondicionerov.html

Si33-102.book Page v Tuesday, June 26, 2001 3:18 PM

P

Picking Power Line and Transmission Line 162
Pipe size reducer (1) 106
Pipe size reducer (2) 106
Pipe size reducer (3) 106
Piping kit for bottom piping KHF30A30U 107
Piping kit for side piping KHF30A30L 107
Piping System Diagrams
Indoor Unit 113
RSXY16·18·20KAY1(E) / YAL(E) 114
RSXY24·26·28·30KAY1(E) / YAL(E) 115
Positioning of indoor unit 6
Positioning of outdoor unit 6
Pressure down despite absence of leaks
during air tight test 121
Procedure for Checking
Maximum Concentration 94, 168

R

REFNET HEADER
KHRJ26K11H 104
KHRJ26K17H 104
KHRJ26K18H 105
KHRJ26K37H 105
KHRJ26K40H 105
REFNET header 108
REFNET JOINT
KHRJ26K11T 103
KHRJ26K17T 103
KHRJ26K18T 103
KHRJ26K37T 103
KHRJ26K40T 104
KHRJ26K75T 104
REFNET joint 108
Refrigerant Pipe Flushing
Fit blanking plugs 18
Flushing 18
Open the main valve on the nitrogen cylinder
and set the pressure regulator to
0.5MPa 18
Set pressure regulator on nitrogen cylinder 18
Refrigerant Pipe Work
Air tight 15
Clean 15
Dry 15
Operational steps 15
The 3 Principles of Refrigerant Piping 15
Remove the yellow shipping stays
from the compressor support 140

S

Selection of Location 138
Selection of Refrigerant Pipe Size 98
Sequential Start 79, 160
Setting Modes
Functions of Pushbutton Switches 65
Mode Change 65
Mode Changing Procedure 66
Monitor Mode 70
Setting Mode 1 67
Setting Mode 2 68
Setting the Cool/Heat Operation 161
Signal interference due to use
of multiple core cable 118
Sleeve and Insert Work
Operational steps 13
Steel insert 13
Through holes in a reinforced
concrete beam 13
Special vacuum drying 33
Standard Operation Limit 131
Standard Supplied Accessories 132
standard work practice for all brazing work 16
Step by Step Installation Procedure 12
Striking a Balance between System Installation
and General Construction Work 8
System Example 157

T

Test Operation
Check Operation 61
Check the Following
Before Turning Power On 60
Turn Power On 60
The analysis of major installation problems
experienced during the year of 1988 7
The centralized control group number
cannot be set 124
The use of “hard solder” is essential 20
Thermal Insulation Work (Refrigerant Piping)
Essential Points of Thermal Insulation 26
Operational steps 26
Tighten the bolts in opposite corners first to ensure
that the connection is true 25
Transmission Wiring and Cool/Heat Selection 159
Transmission wiring between the cool/heat selector
and the outdoor unit is too close to
a high voltage wire 124

U

Unpacking and Placing the Unit 140

V

Vacuum Drying 29
Vacuum Drying Procedure 32
VRV Inspection Sheet 109

W

When you keep on tightening the flare nut
with a spanner 166
Wired Remote Control –
Heat Recovery Ventilation <BRC301B61> 84
Wired Remote Control <BRC1A61(51)> 83
Wiring Check Operation 80
Wiring Diagrams
RSXY16·18·20KAY1(E) / YAL(E) 116
RSXY24·26·28·30KAY1(E) / YAL(E) 117

Все каталоги и инструкции здесь: https://splitsystema48.ru/instrukcii-po-ekspluatacii-kondicionerov.html

splitoff.ru

Большая библиотека технической документации

https://splitsystema48.ru/instrukcii-po-ekspluatacii-kondicionerov.html

каталоги, инструкции, сервисные мануалы, схемы.